Patio XS Sauna

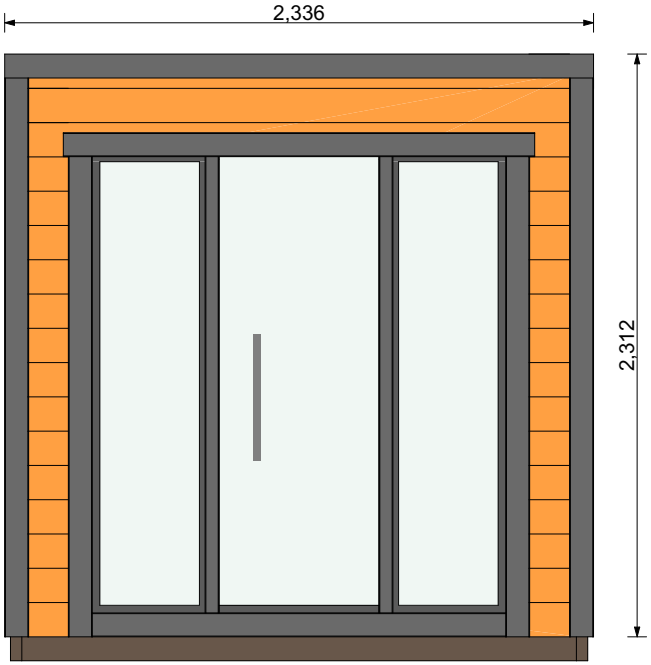

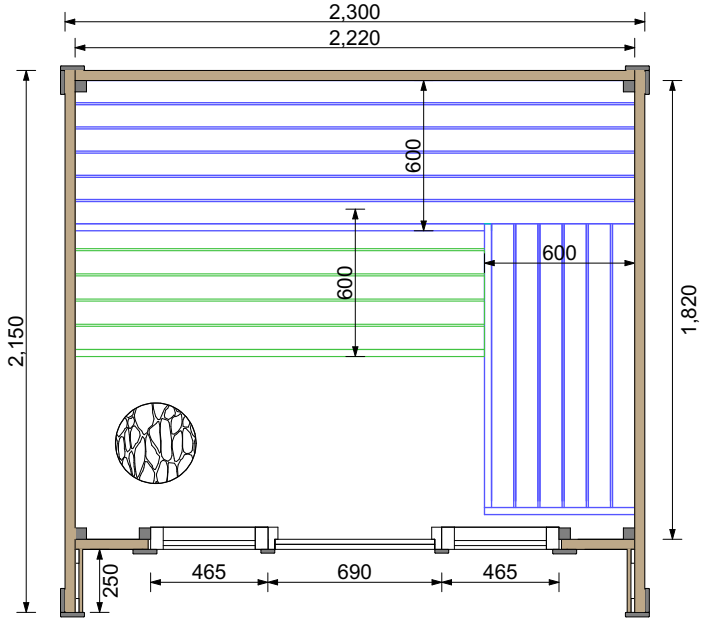

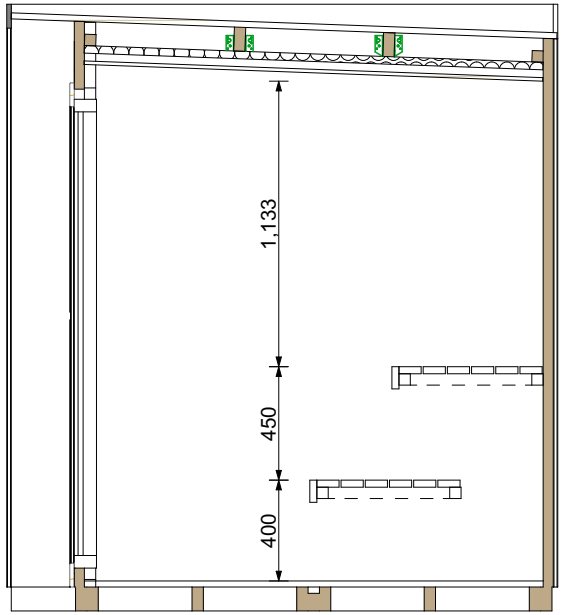

Patio XS Installation Manual

PATIO XS

Marking		*Note*	Lenght	pcs	
01	40x146 WALL LOG		**2220**	**16**	
EXTRA	40x146 WALL LOG		**2220**	**1**	
01B	40x146 WALL LOG	*Width (drawing)*	**2220**	**1**	
01C	40x146 WALL LOG	*Width 68 (drawing)*	**2220**	**1**	
01D	40x146 WALL LOG	*Cutout (drawing)*	**2220**	**1**	
01E	40x146 WALL LOG	*Cutout (drawing)*	**2220**	**1**	
01F	40x146 WALL LOG	*Width 30 (drawing)*	**2220**	**1**	
02	40x146 WALL LOG		**2150**	**32**	
02B	40x146 WALL LOG	*Width 136 (drawing)*	**2150**	**2**	
03	40x146 WALL LOG		**290**	**26**	
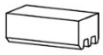	HAMMER BLOCK			**2**	

PATIO XS

CUTOUT DRAWINGS

01B	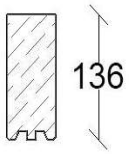	*Width 136*	**2220**	**1**	
01C	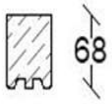	*Width 68*	**2220**	**1**	
01D	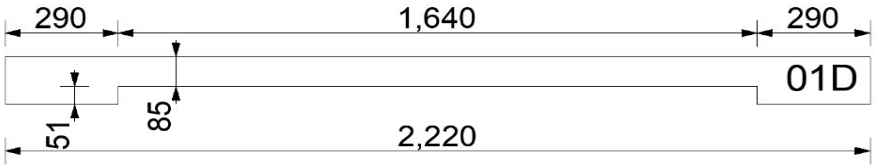		**2220**	**1**	
01E	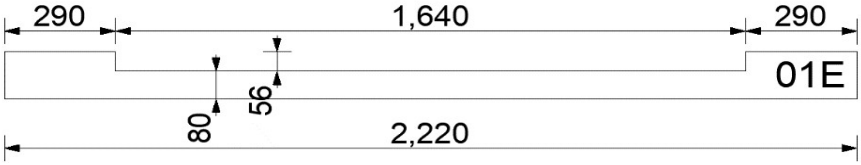		**2220**	**1**	
01F	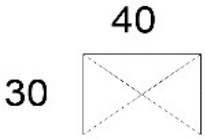	*30x40 Block for roof*	**2220**	**1**	
02B	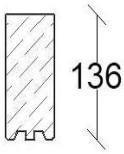	*Width 136*	**2150**	**2**	
Marking		***Note***	**Lenght**	**pcs**	
AR-1	45x95 FLOOR FRAME		**2200**	**8**	
AR-1	**45x70** FLOOR FRAME	***45x70!***	**2200**	**1**	
AR-2	45x95 FLOOR FRAME		**2145**	**1**	
AR-2A	45x95 FLOOR FRAME	*Water drainage*	**2145**	**1**	

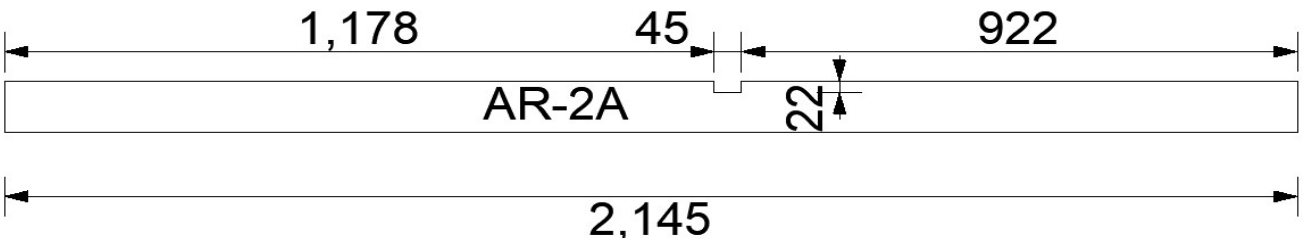

PATIO XS

KL-1	24x120 ROOF BOARD		**2173**	**20+2**	
PL-1	24x120 FLOOR BOARD		**892**	**40+2**	
P-1	45X45 CORNER POST	***Cut in site***	**2230**	**2**	
P-2	45X45 CORNER POST	***Cut in site***	**2165**	**2**	
UR-1	45x45 DOOR/ WINDOW FRAME		**1950**	**2**	
T-2	45x45 BEAM		**2130**	**2**	
UR-2	45x45 DOOR/ WINDOW FRAME		**1620**	**2**	
T-1	45x95 BEAM	***45x95!***	**2215**	**2**	

PATIO XS

Marking		***Note***	**Lenght**	**pcs**	
EXTRA	18x95 ROOF MOULDING		**2400**	**2**	
L-1	18x95 ROOF MOULDING		**2336**	**1**	
L-2	18x95 CORNER MOULDING	*Oversize 30mm*	**2340**	**2**	
L-3	18x95 CORNER MOULDING	*Oversize 30mm*	**2240**	**6**	
L-4	18x95 ROOF MOULDING		**2150**	**2**	
UL-1	18x95 DOOR MOULDING		**1905**	**2**	
EXTRA	18x95 DOOR MOULDING		**1905**	**1**	
UL-2	18x95 DOOR MOULDING		**1860**	**1**	
UL-3	18x95 DOOR MOULDING		**1630**	**1**	
UL-4	15x55 DOOR MOULDING		**1810**	**2**	
EXTRA	15x55 DOOR MOULDING		**1810**	**1**	
DI-0	45x45 CORNER MOULDING		**2200**	**4+1**	
DI-1	15x55 DISTANCE BOARD		**2244**	**8**	
EXTRA	15x55 BASE- AND CEILING BOARDS		**2244**	**2**	
DI-2	15x55 DISTANCE BOARD FOR INSULATION		**2215**	**4**	
DI-3	15x55 BASE- AND CEILING BOARDS		**2130**	**3+1**	
DI-4	15x55 BASE- AND CEILING BOARDS		**1730**	**4**	

PATIO XS

STP-1	14x121 CEILING LINING BOARDS		**1815**	**20+2**	
STP-2	14x121 WALL LINING BOARDS		**250**	**40+2**	
	SLOPE DETAIL UNDER FLOOR BOARD 3MM		**2200**	**2**	
	SLOPE DETAIL UNDER FLOOR BOARD 6MM		**2200**	**2**	

PATIO XS

Marking		*Note*	lenght	pcs	
	SAUNA BENCH 600x2215			1	
	SAUNA BENCH 600x2215			1	
	SAUNA BENCH 600x1127			1	
	BENCH SUPPORT SET 45x45			1	
	SIDE FRAME SET 596x830 (1 DETAIL 742mm NOT FIXED)+2pcs Adjustable Legs			1	
	GLASS DOOR88x690x1860 BRONZE PREMIUM HANDLE	*WITHOUT FRAME*		1	
	WINDOW 88x465x1860 BRONZE	*WITHOUT FRAME*		2	
	VENTILATION LOUVRE WOOD D100			1	
	VENTILATION GRID D100			3	
	SPU INSULATION 30x600x1200			**6**	
	FOIL TAPE 10M			**1**	
	WATER DRAINAGE DETAIL 20mm		2220+	**1**	
Marking		***Note***	**Lenght**	**pcs**	
	JOIST HANGER 45x97			4	
	SCREW 5x40 FOR JOIST HANGER			40	
	SCREW 6x180 FOR WALL LOGS			200	
	SCREW 5x90 FOR FLOOR FRAME			100	
	SCREW 4.5x70 WALL LOGS SAUNA BENCHES			600	
	SCREW 3x40 DOOR- AND WINDOW MOULDINGS			150	
	SCREW 3.5x50 FLOORBOARD			300	
	NAIL 40 LINING BOARDS			350	
	NAIL 70 ROOF BOARDS			200	

ROOF COVER					
	SCREWS FOR ROOF DETAILS			**50**	
	EPDM ROOF COVER 2.37x3.05m		7.2	**m2**	
	EPDM GLUE 1.6L		1.6	**L**	
	EPDM QUICKPRIME GLUE (LITTLE CONTAINER)			**1**	
	EPDM SPLICE TAPE			**2250**	
	PAINT ROLLER			**1**	
	METAL ROOFING SHEET 2218mm	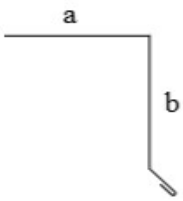		**1**	
	METAL ROOFING SHEET 68mm width	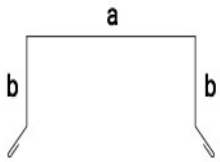	2320	**1**	
	METAL ROOFING SHEET 68mm width		2350	2	

Floor Frame

PATIO XS

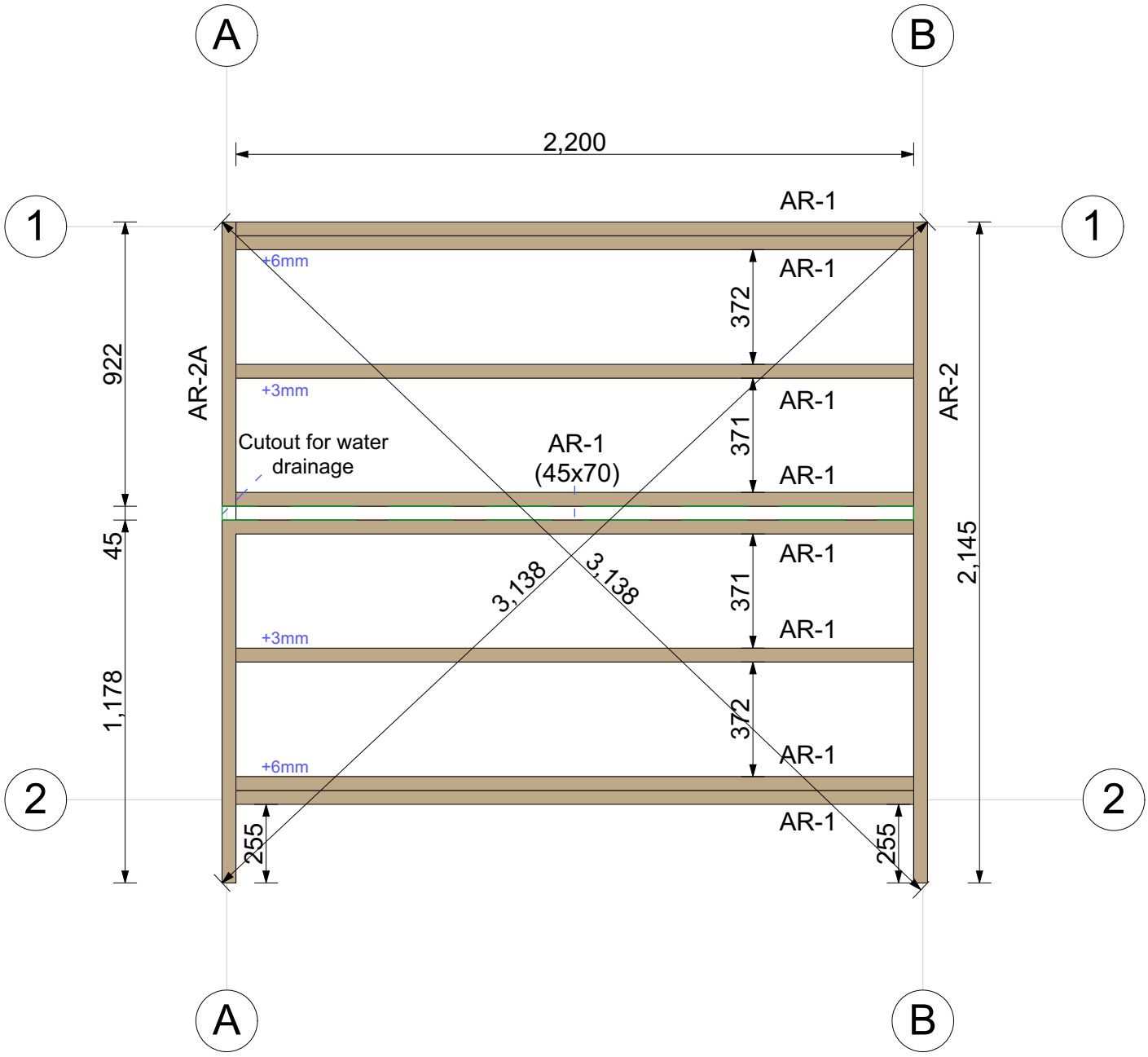

*Check floor frame diagonals

*Water drainage cutout can be on the right or left side

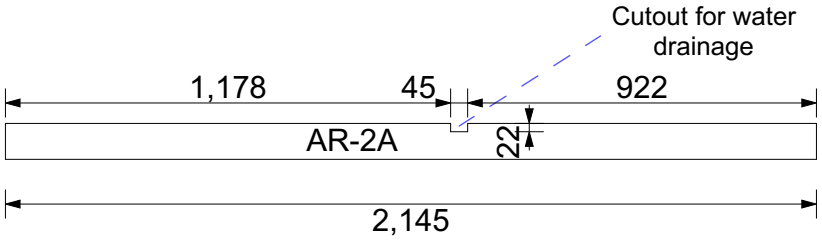

AR-1=2200mm	**8pcs**
AR-1=2200mm (45x70)	**1pcs**
AR-2 = 2145mm	**1pcs**
AR-2A = 2145mm	**1pcs**

Floor Frame

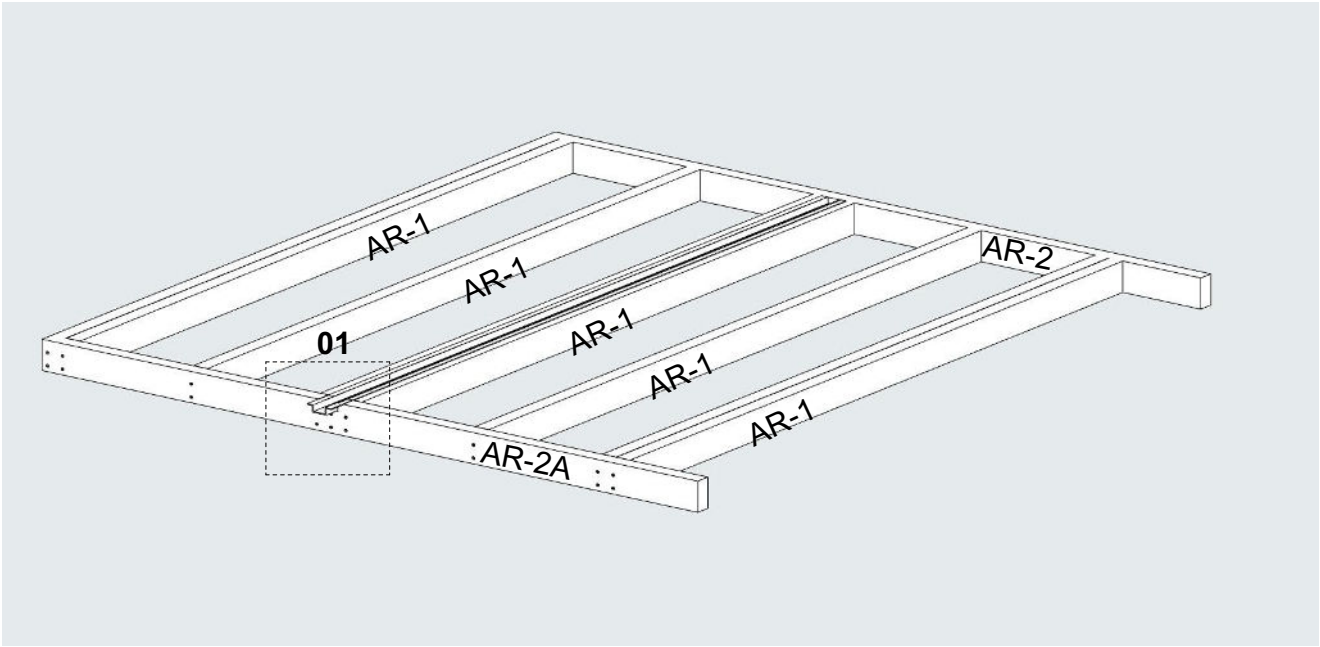

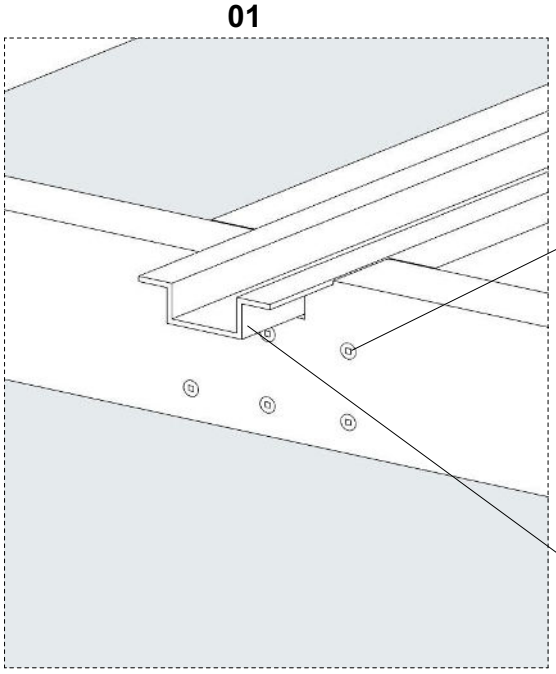

*Use 90mm screws and battery drill

Screws 90mm

Water drainage detail

Take care! Sharp edges!

*Install water drainage detail before first log wall row

First log row

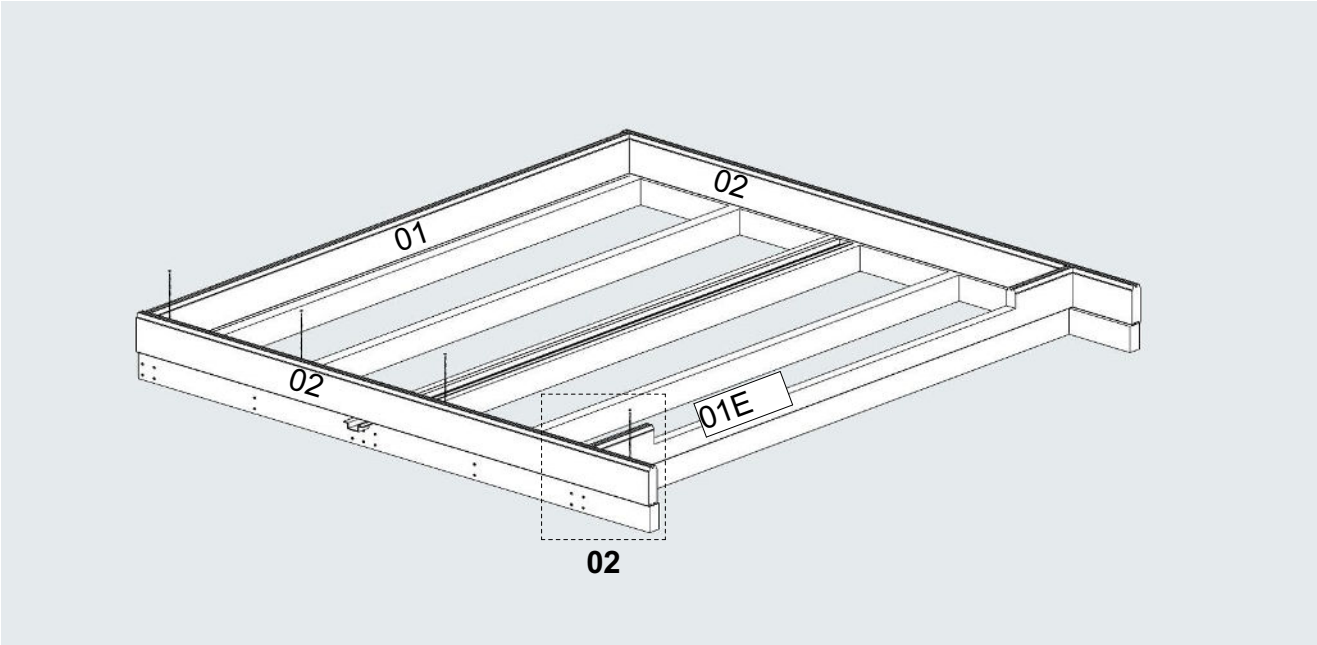

Fix first log wall row to the floor frame with 180mm screws
(Suggestion: drill hole before inserting the screws)

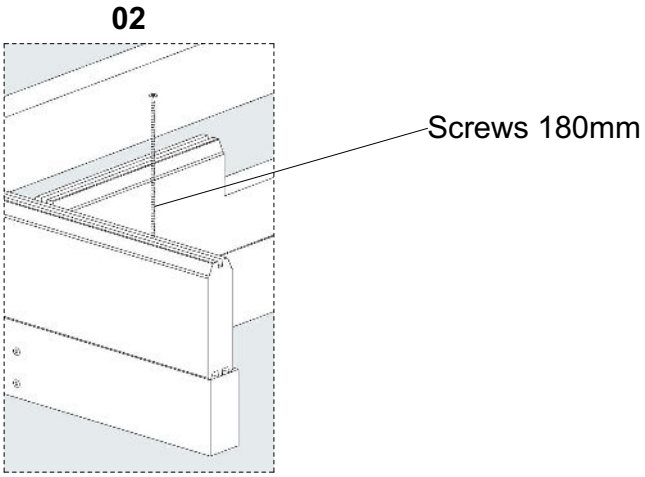

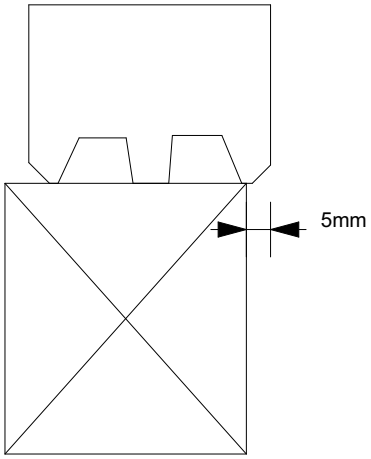

Leave 5mm gap outside with floor frame and 1st wall row

Posts

*Install 70mm screws as shown in scheme:

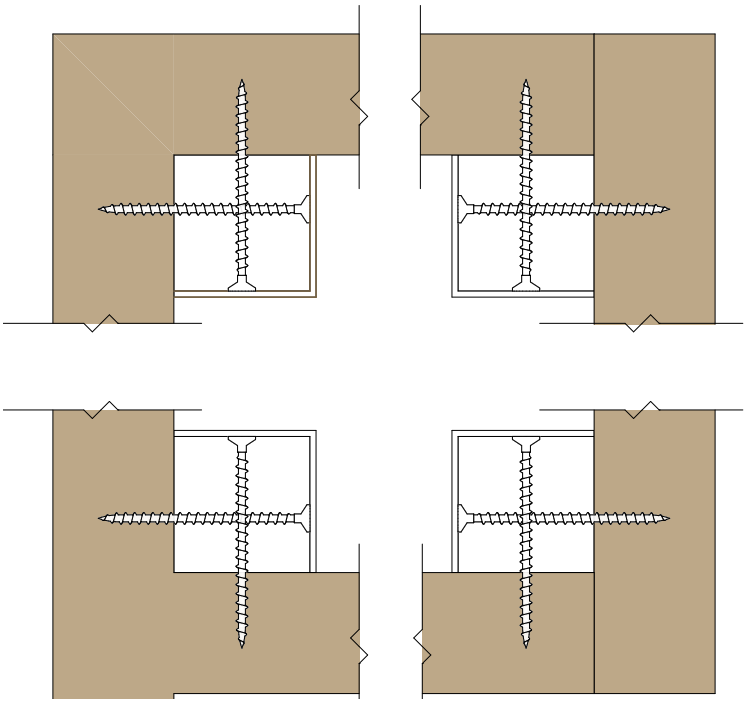

Use temporary supports to level the walls

* Use level tool and battery drill to fix walls to posts

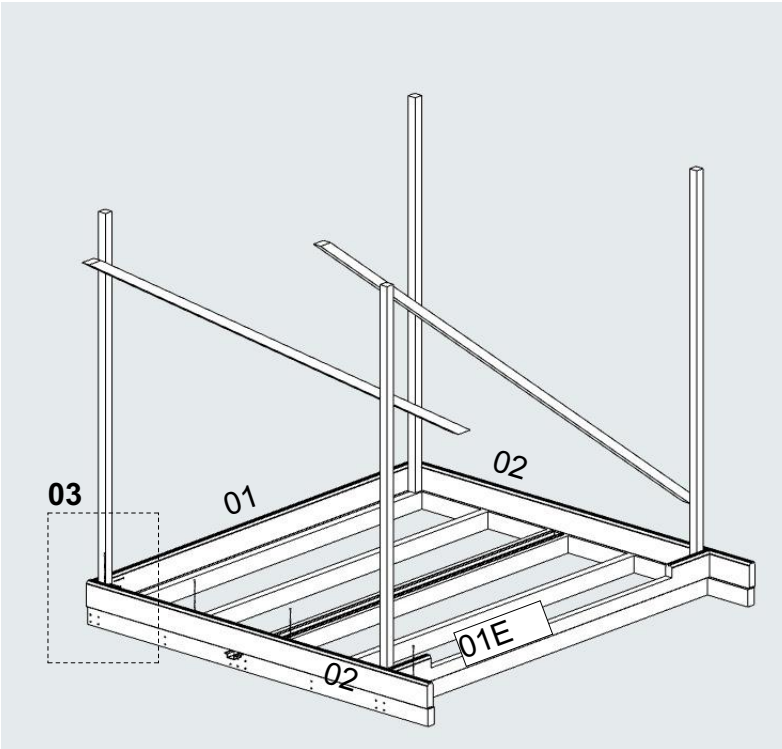

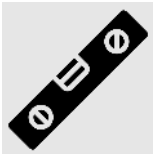

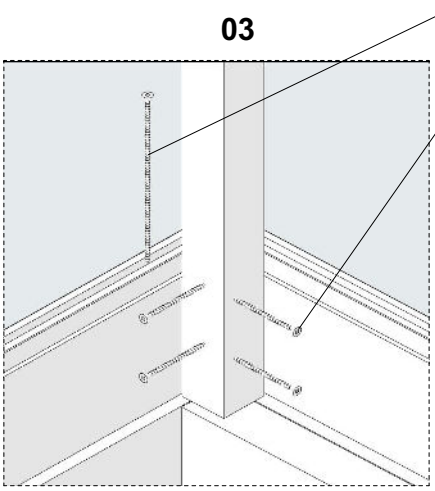

*2 pcs 70mm screws per wall log/ post connection
* USE 180mm SCREWS IN EVERY LOG WALL ROW!

Fix every wall log vertically
with 180mm screws

Wall Layouts

PATIO XS

Wall 1 (view from outside)

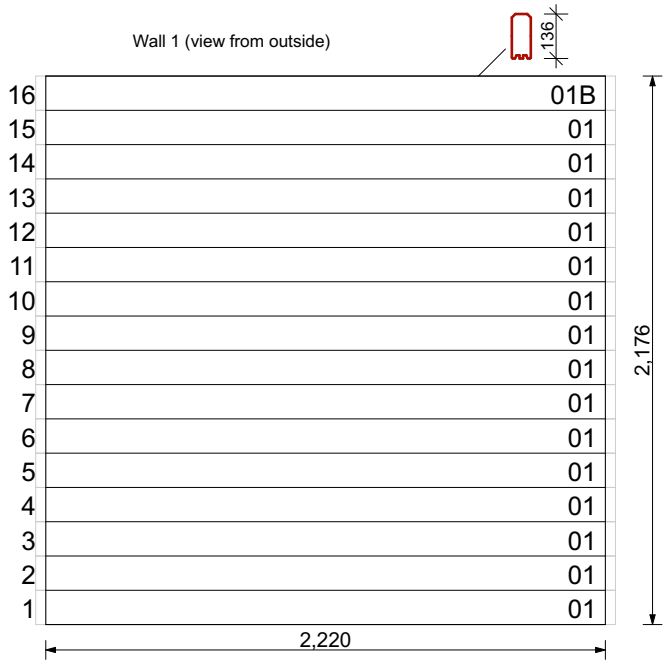

Wall B (view from outside)

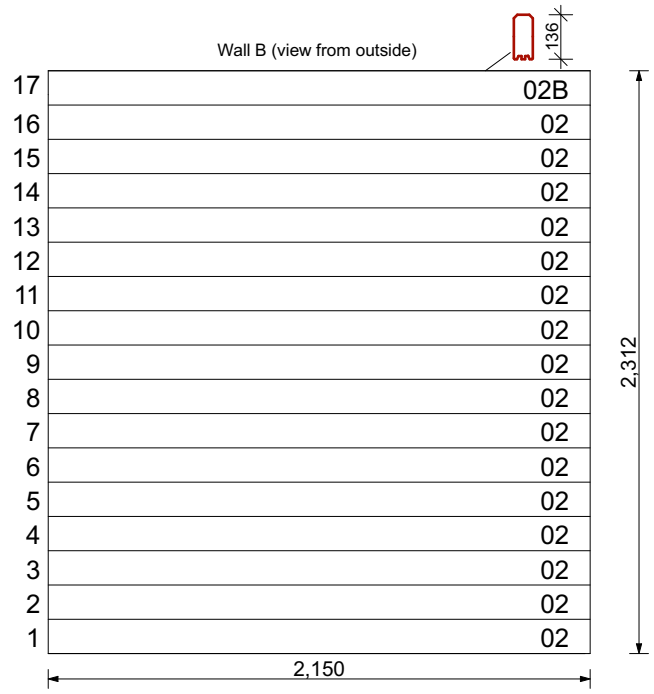

Wall A (view from outside)

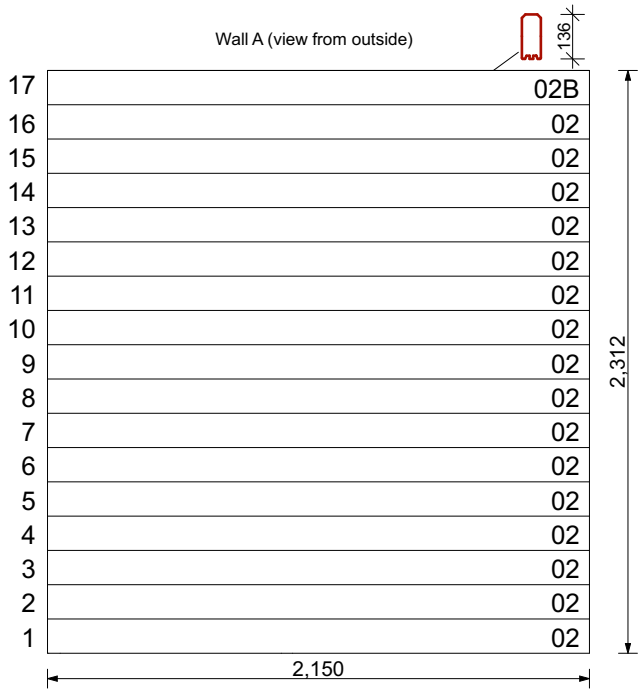

Wall 2 (view from outside)

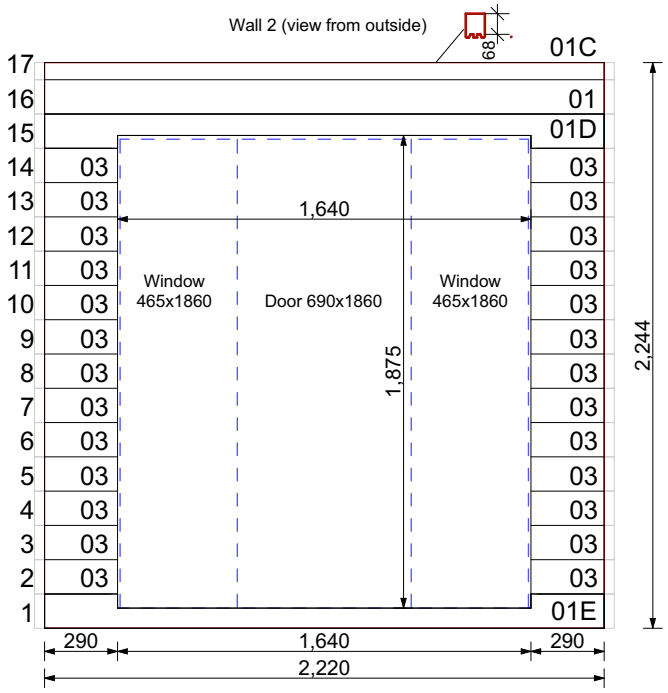

Details:

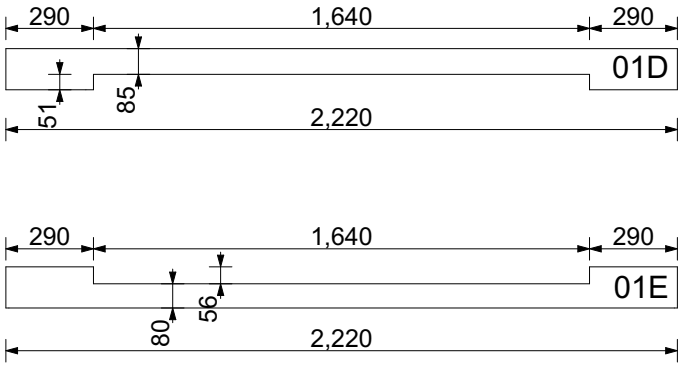

Top view:

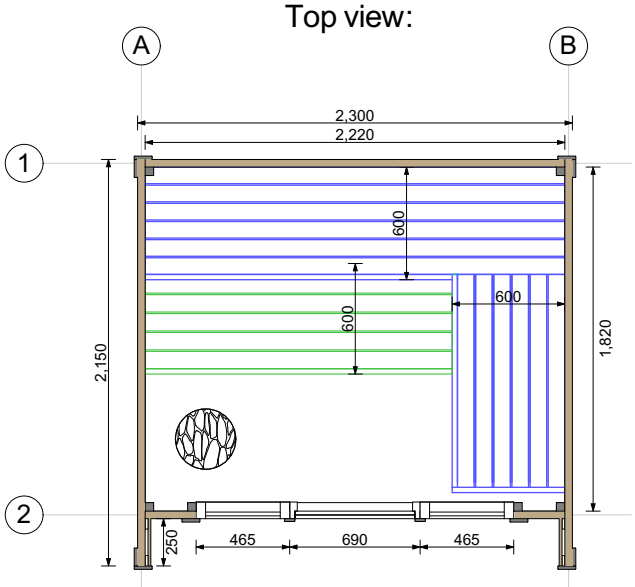

Last row

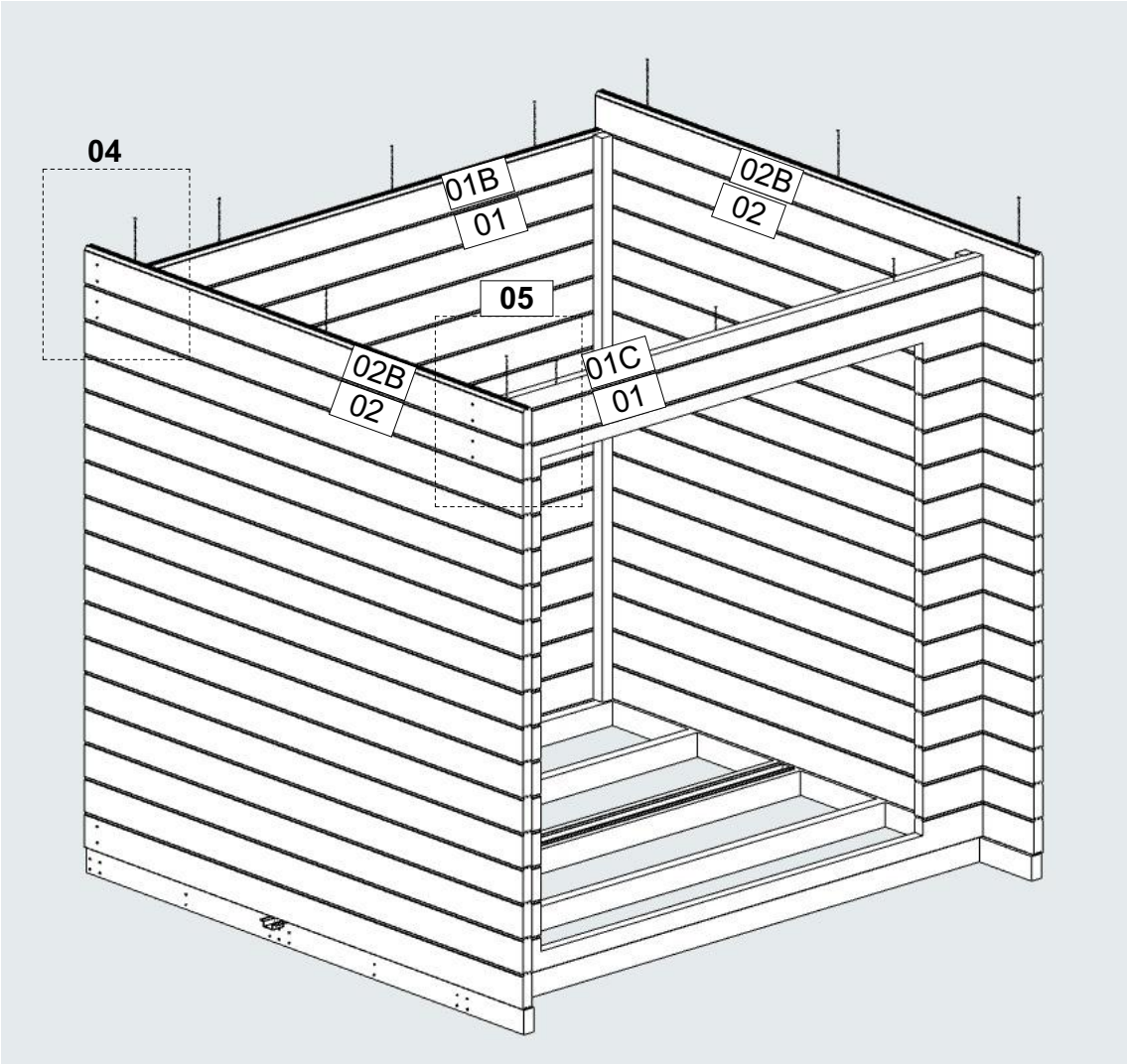

* To install wall logs use rubber hammer and hammer block

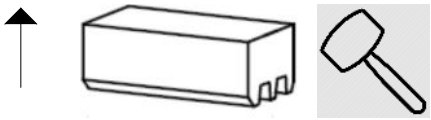

Install last wall detail to the second to last wall detail with 180mm/ 90mm screws
(Suggestion: drill hole before inserting the screws)

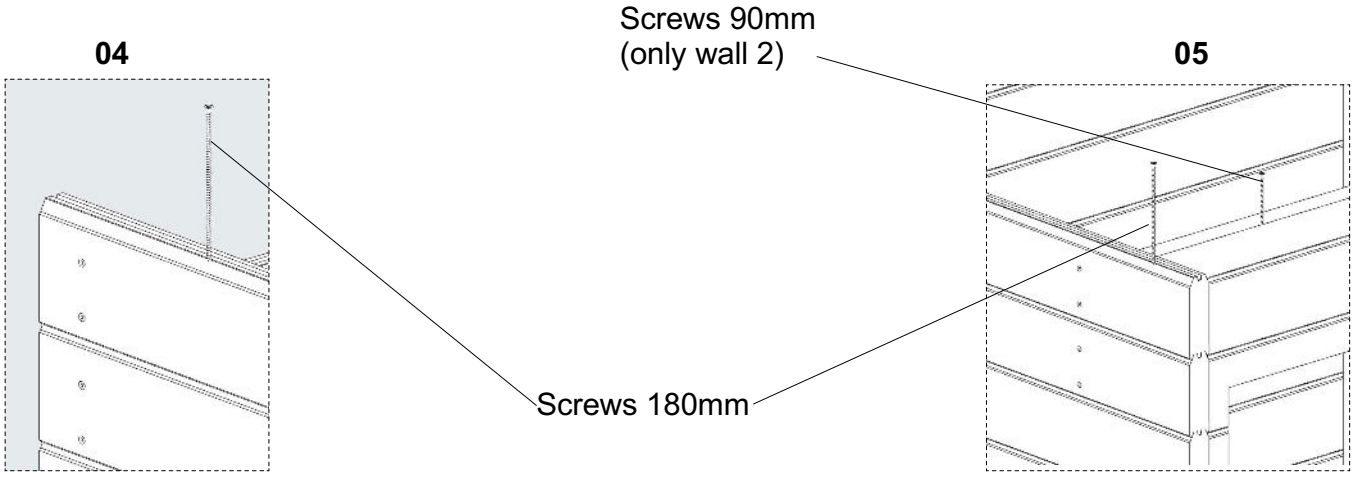

Ceiling beams and joist hanger

Temporarily attach roof board on top of the walls. Measure out 95mm from roof board (downward) and 547mm from the walls for the joist hangers. Install 45x45 beams for ceiling boards.

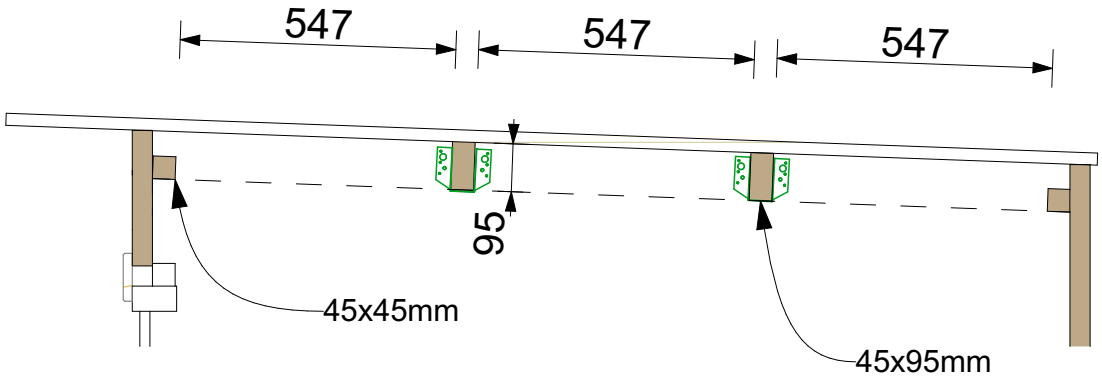

Top view

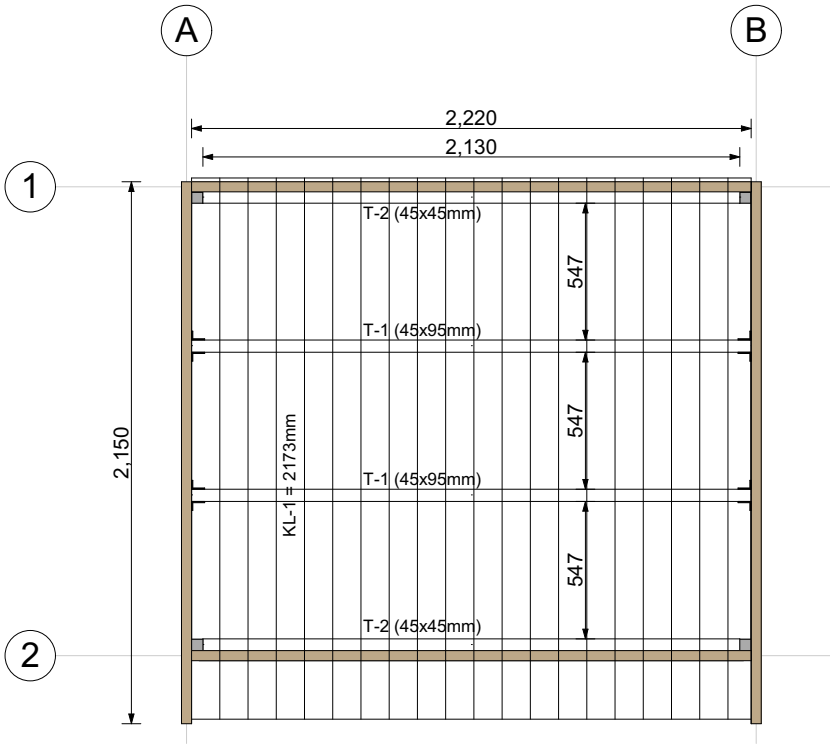

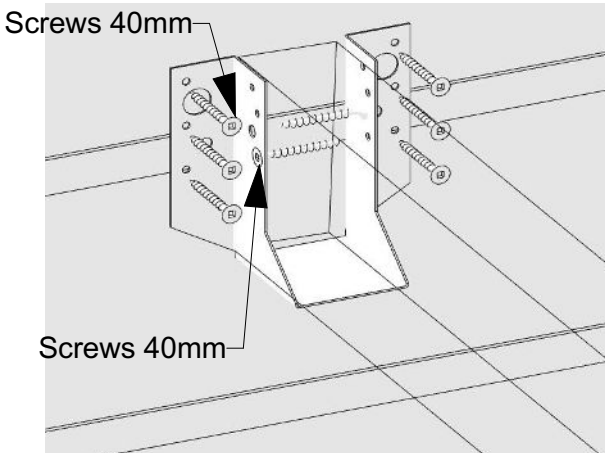

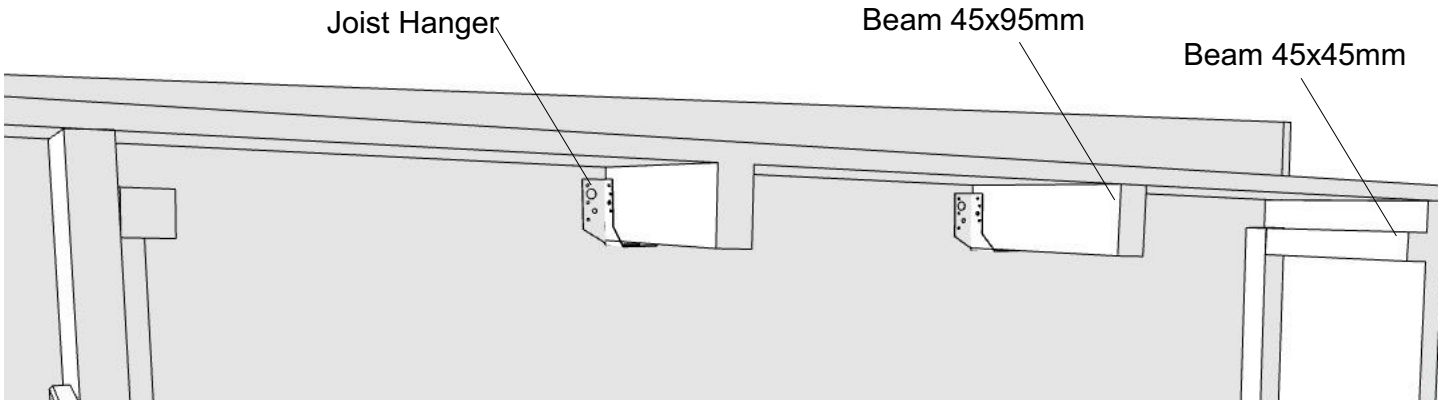

Roof boards

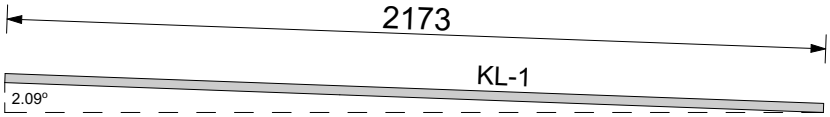

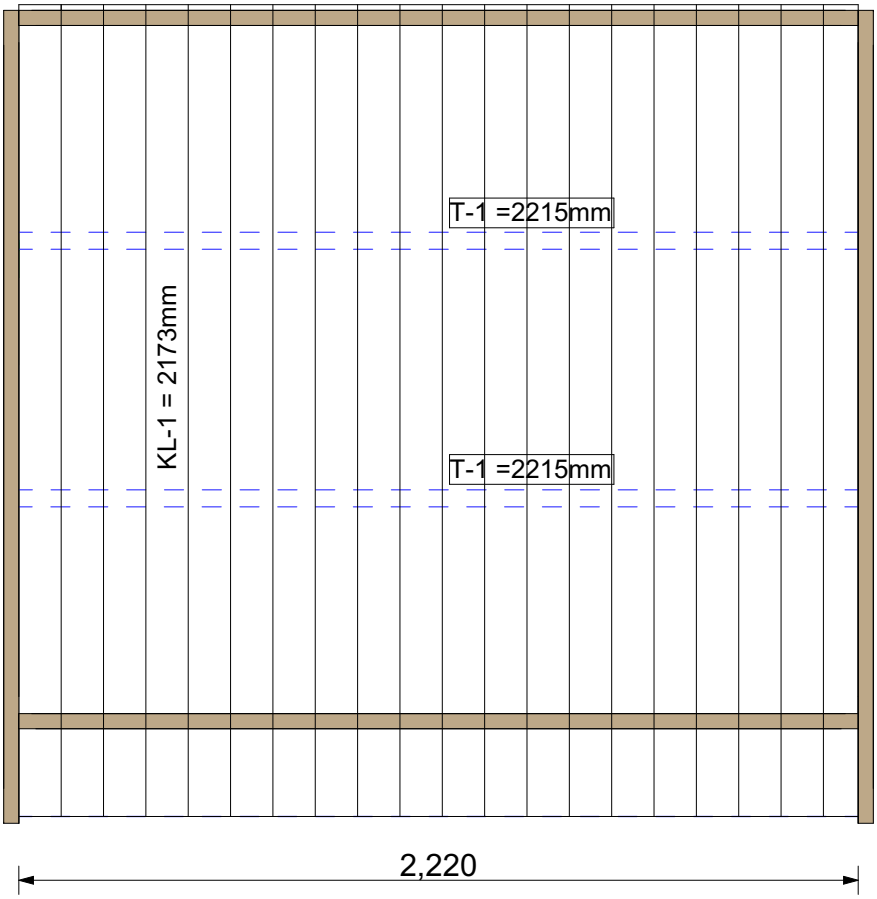

Cut the last roof board to lenght

SUGGESTION: Start with half roof board, otherwise the final board will be too small

Use 8 nails (75mm) per roof board

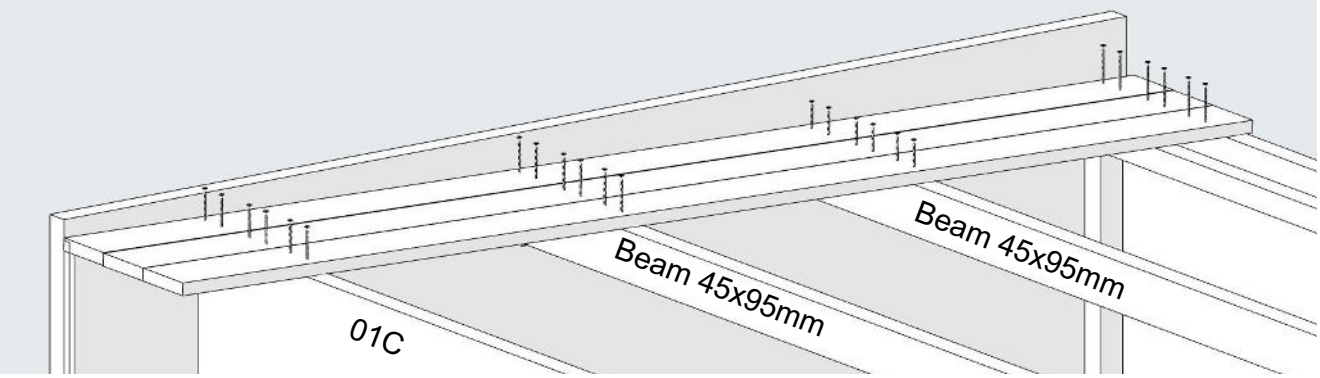

Ceiling

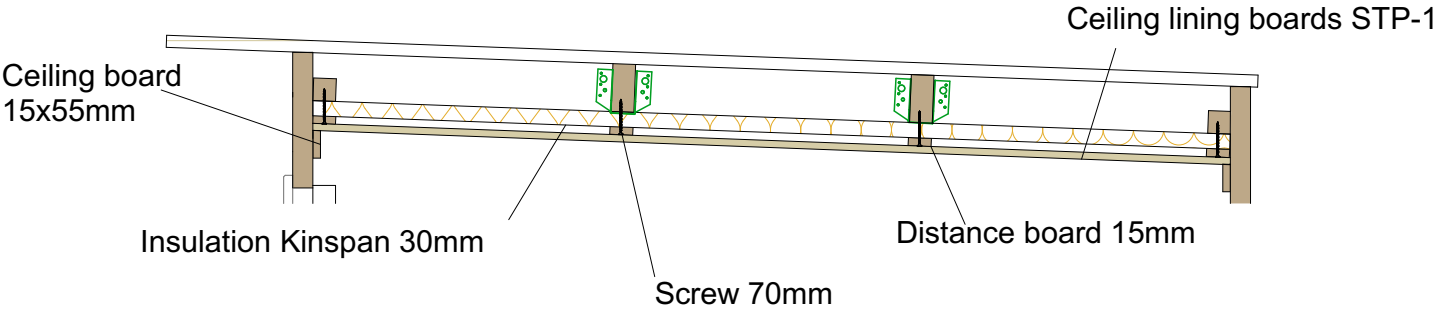

Use tape for SPU insulation overlaps

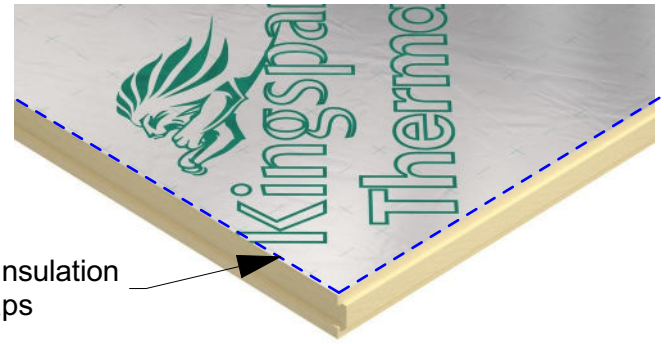

Install the SPU insulation to the beams/ rafters with the distance board and 70mm screws

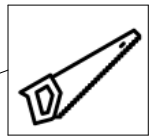

Cut the last ceiling board to lenght

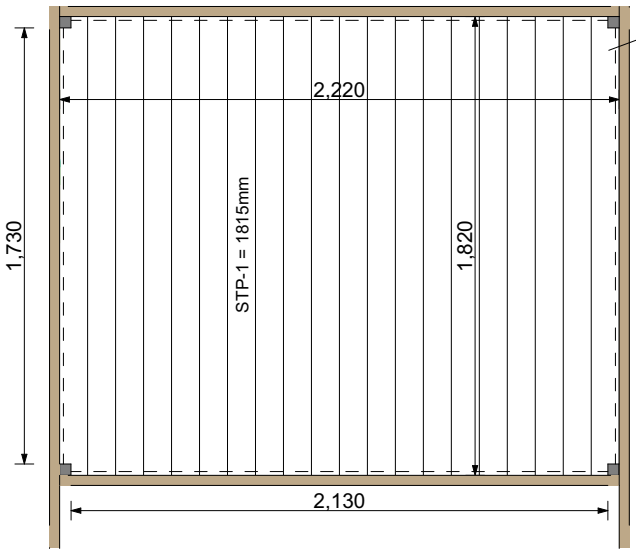

Leave ~3mm gap between ceiling lining board and log wall

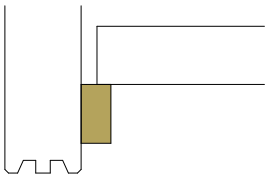

Fix ceiling lining boards with 40mm nails as shown :

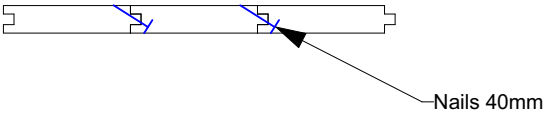

Floor Boards

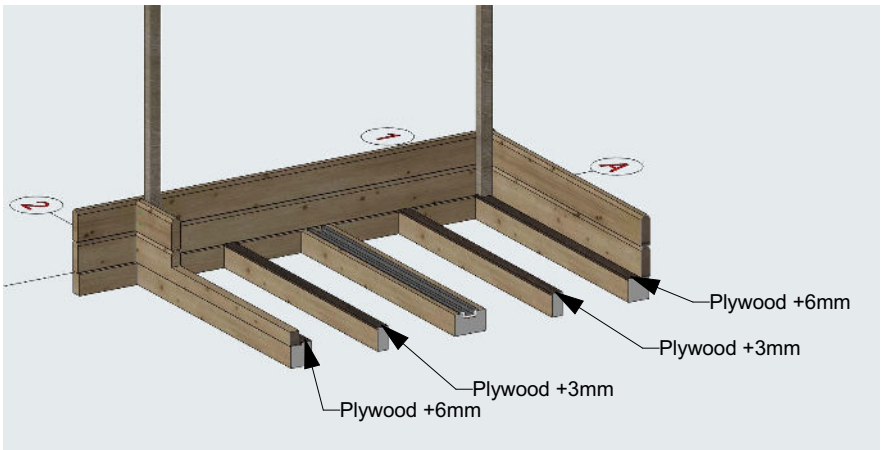

Section floor boards incline

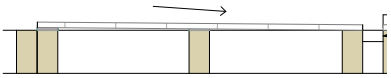

Apply plywood (3 and 6mm) to give floor board incline for water drainage

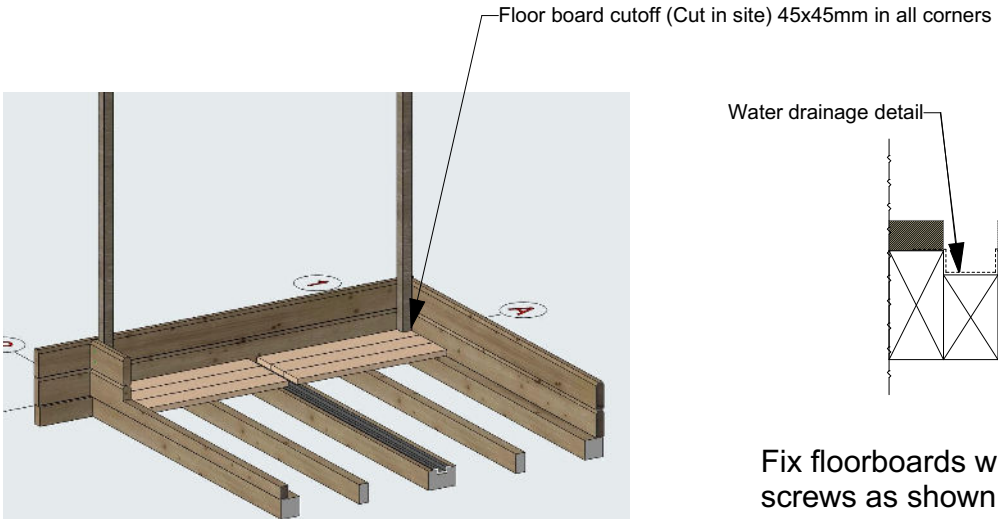

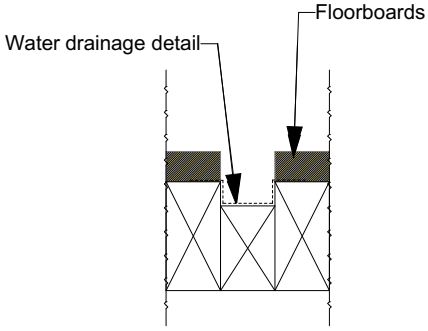

Fix floorboards with 40mm screws as shown :

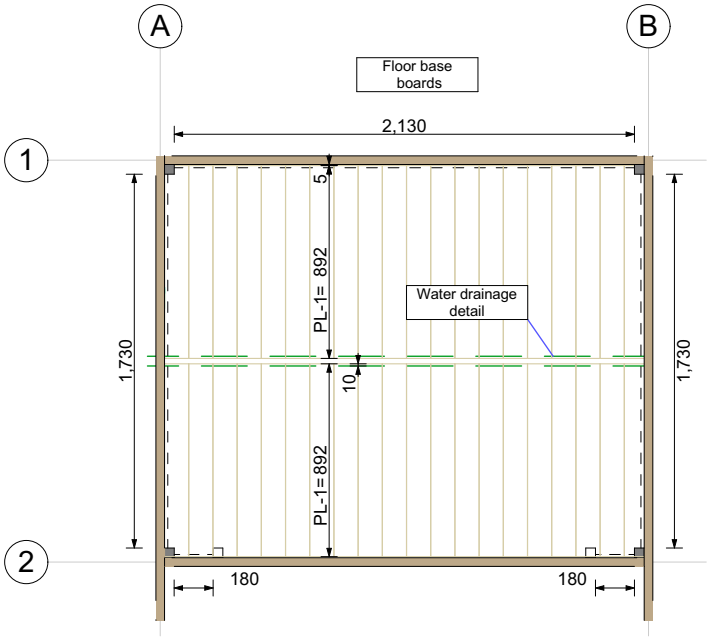

Leave ~3mm gap between floor board and wall

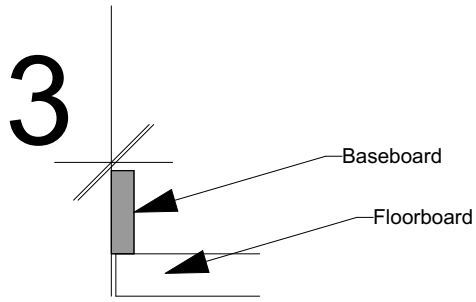

Door and windows

1. Fix the door and windows to the frame.
2. **Remove Glass from the door to make the installation easier**
3. Lift the door/ window in place
4. Fix the door/ window frame to the log wall with 70mm screws. (Will be covered with moulding)

1. Fix the door and windows to the frame.

1.

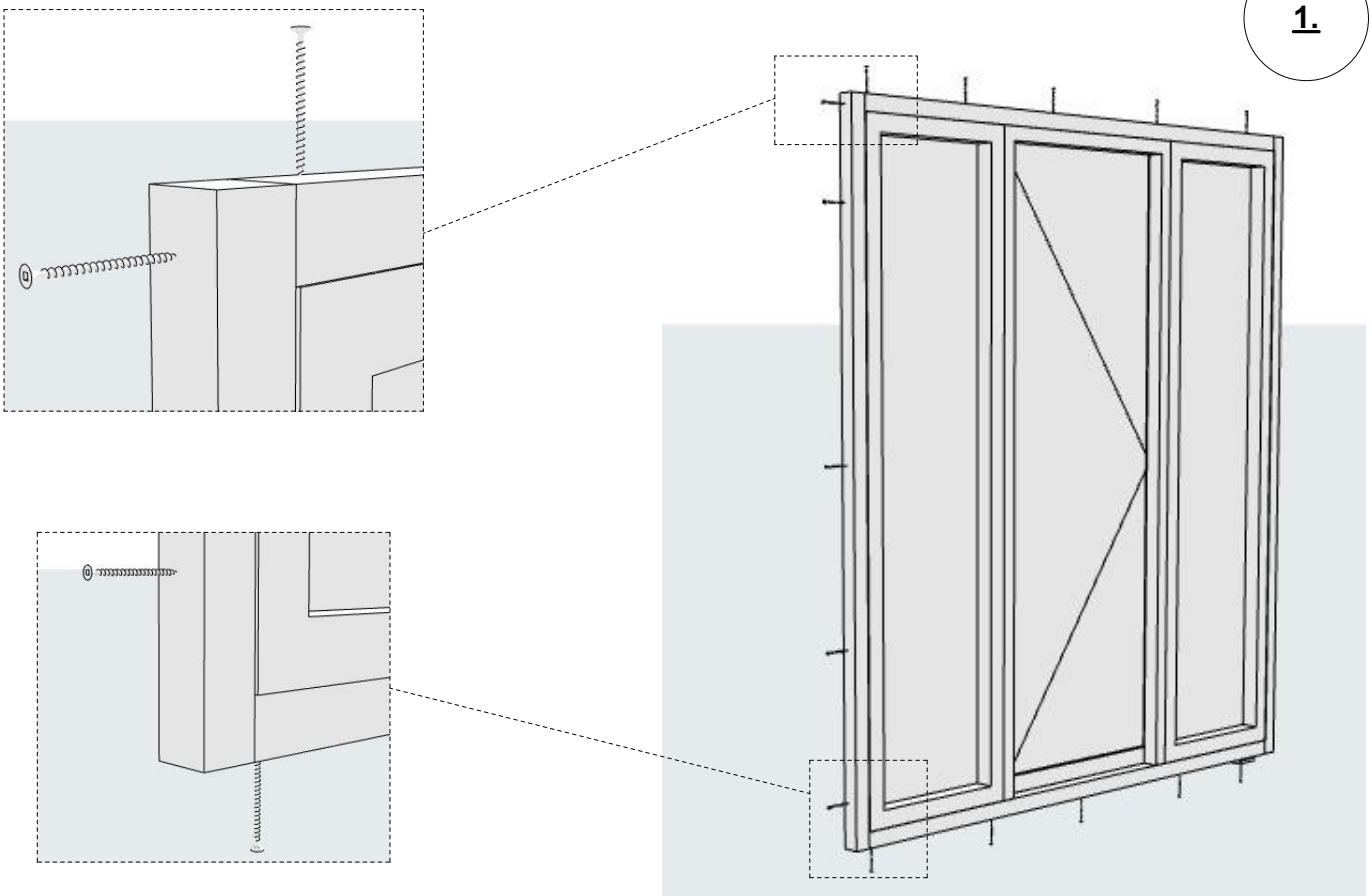

3. Lift the door/ window in place

3.

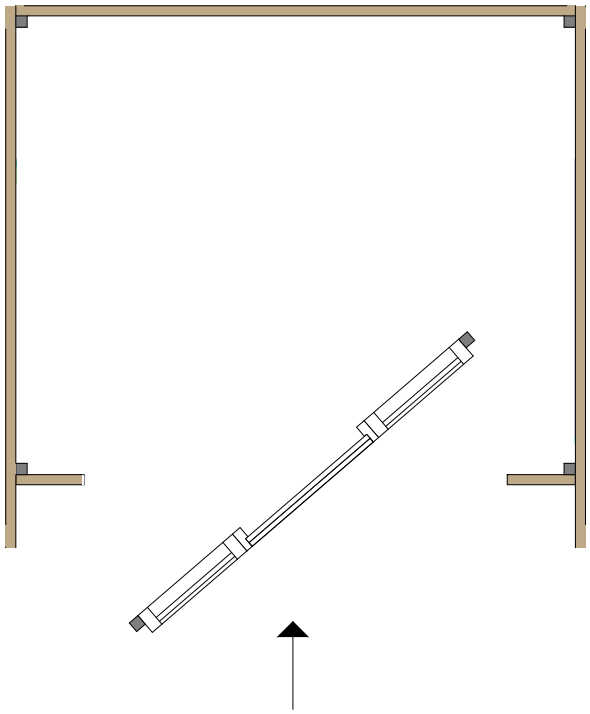

TAKE CARE, THE DOOR AND WINDOWS ARE HEAVY!

Door and windows

1. Fix the door and windows to the frame.
2. **Remove Glass from the door to make the installation easier**
3. Lift the door/ window in place
4. Fix the door/ window frame to the log wall with 70mm screws. (Will be covered with moulding)

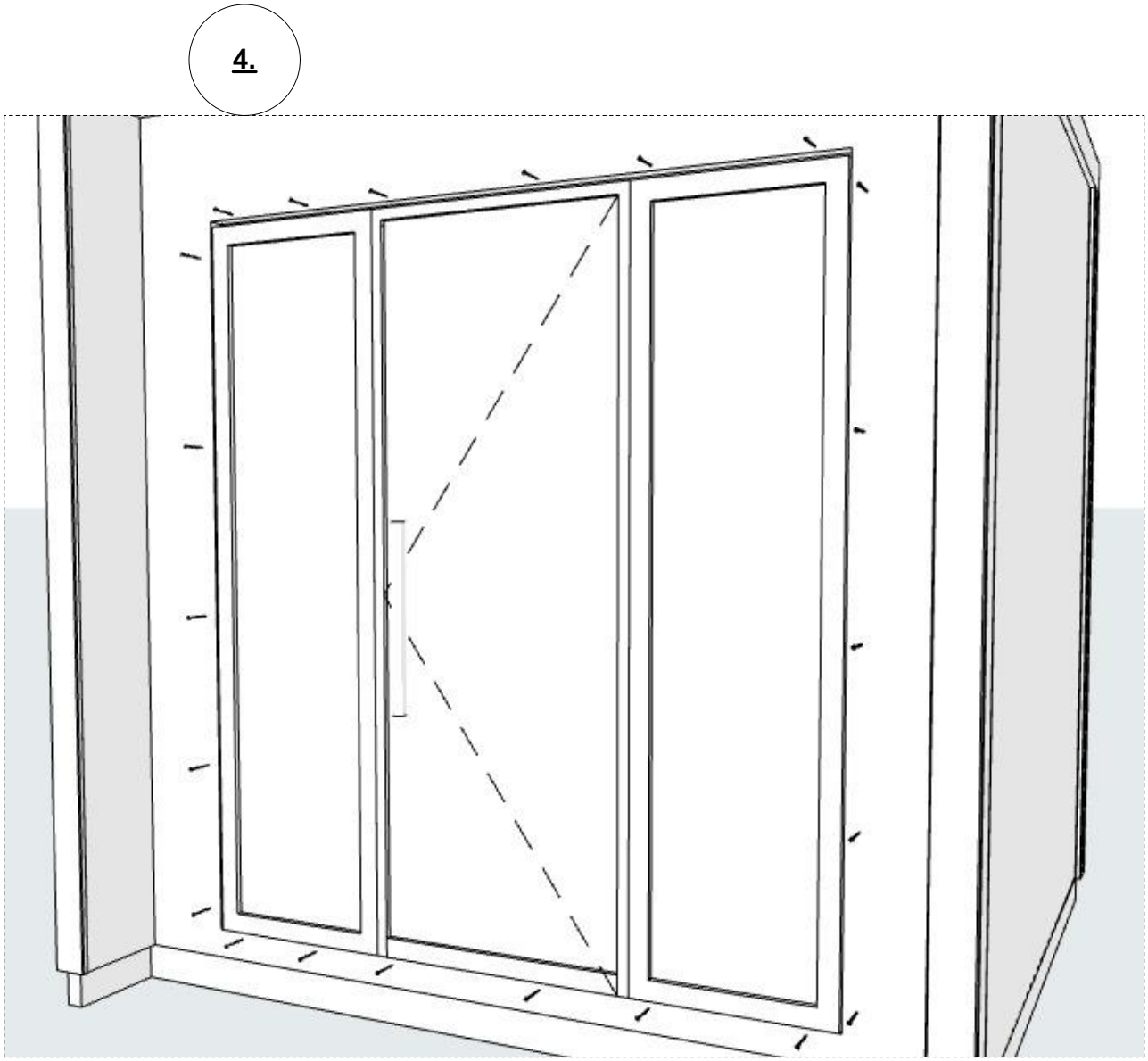

4. Fix the door/ window frame to the log wall with 70mm screws. (Will be covered with moulding)

Outer lining boards

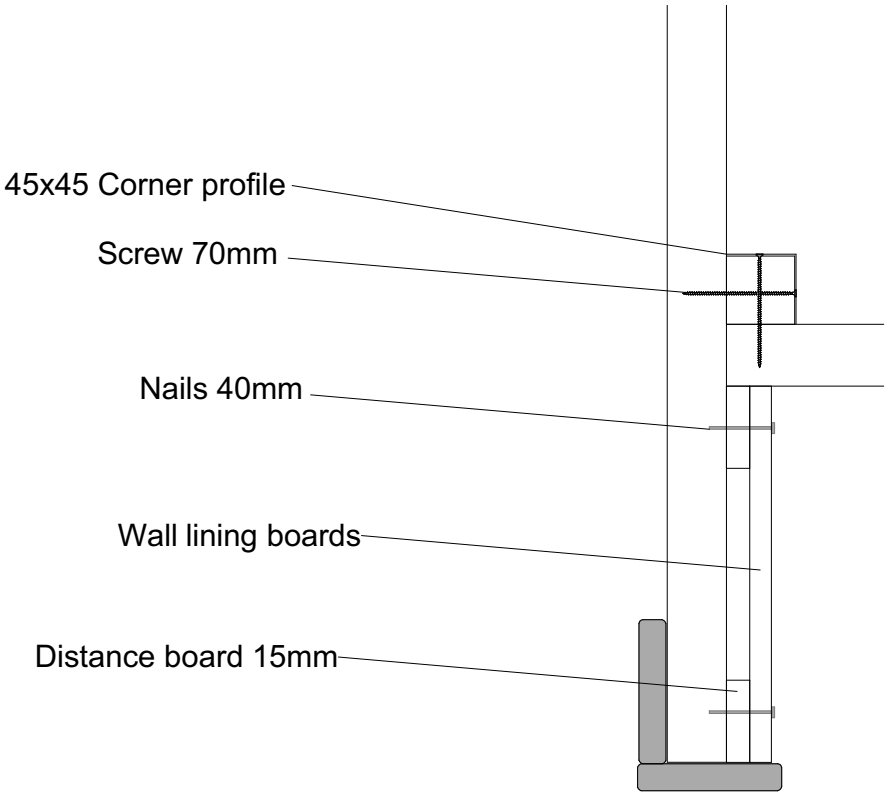

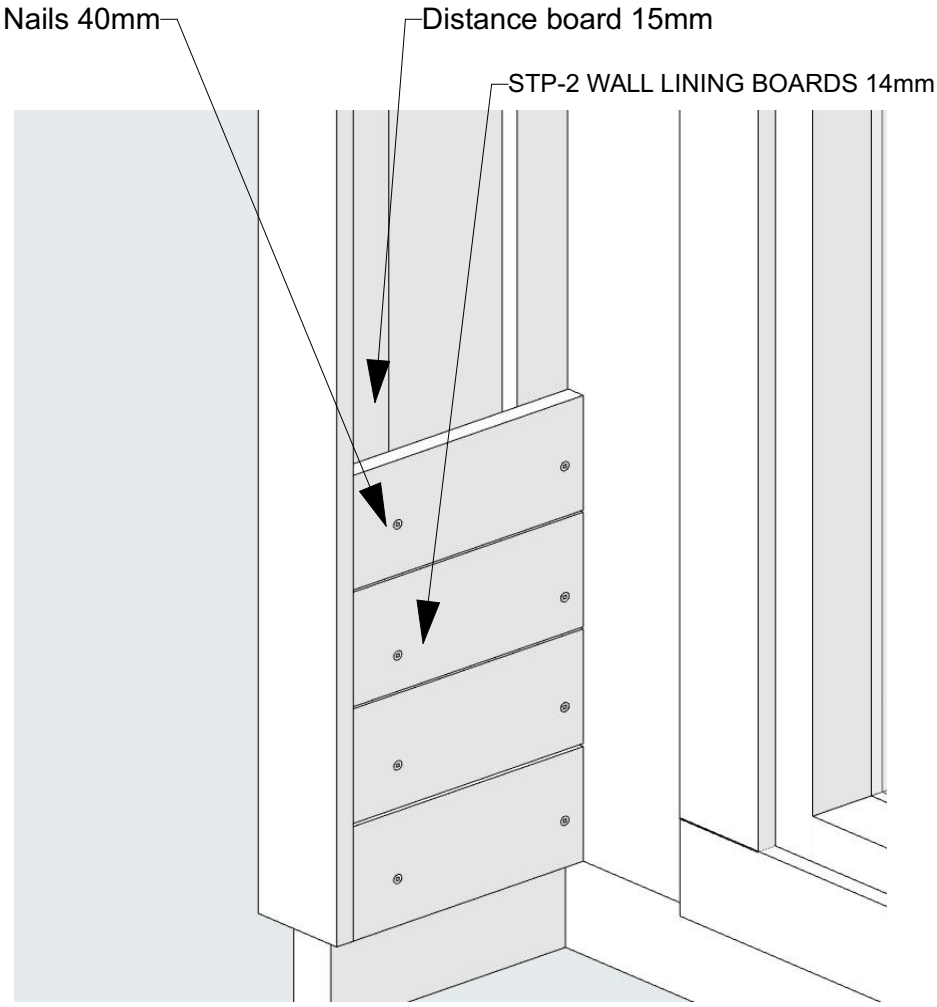

Mouldings

*Corner moulding cutoff

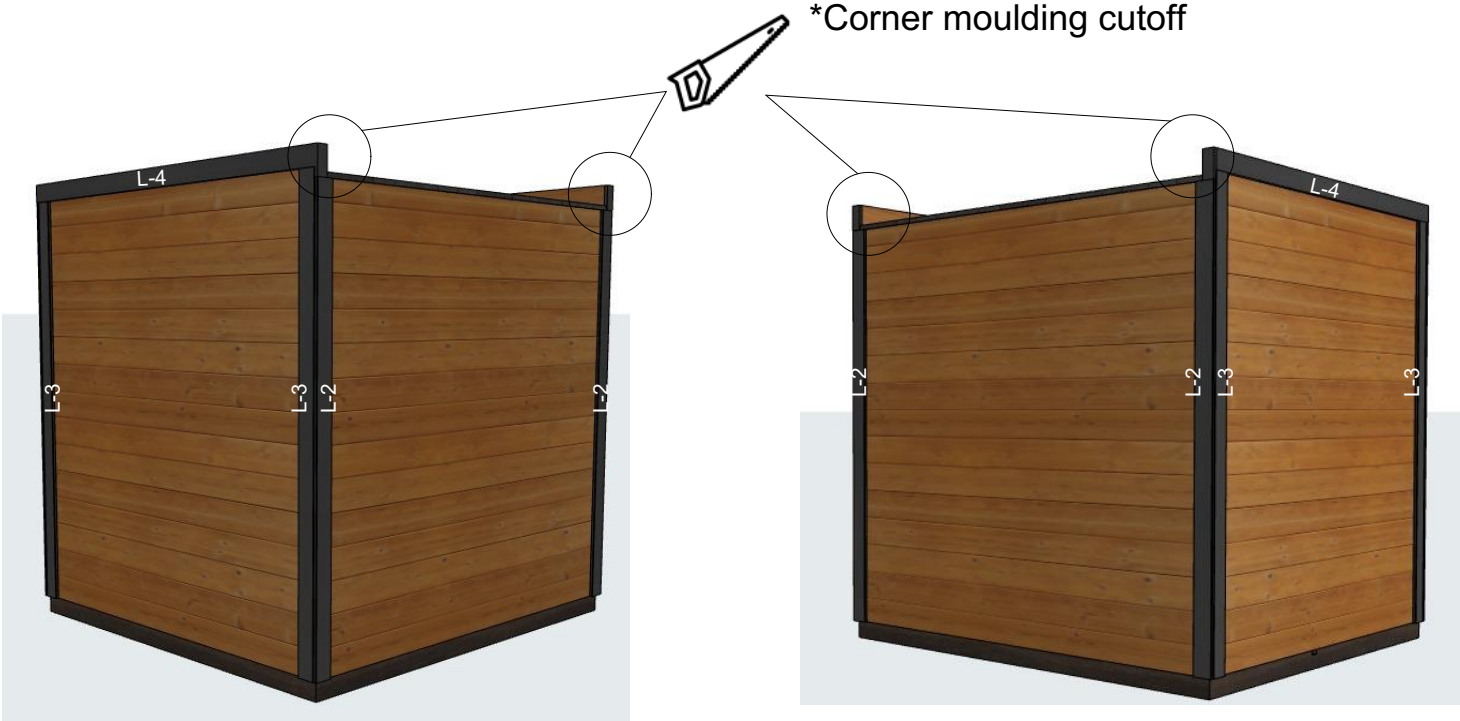

*Use 3x40mm screws and battery drill to attach corner mouldings and door mouldings

*Cut vertical corner mouldings to lenght

Sauna Benches

PATIO XS

1. Fix upper and lower bench supports to the wall with 70mm screws

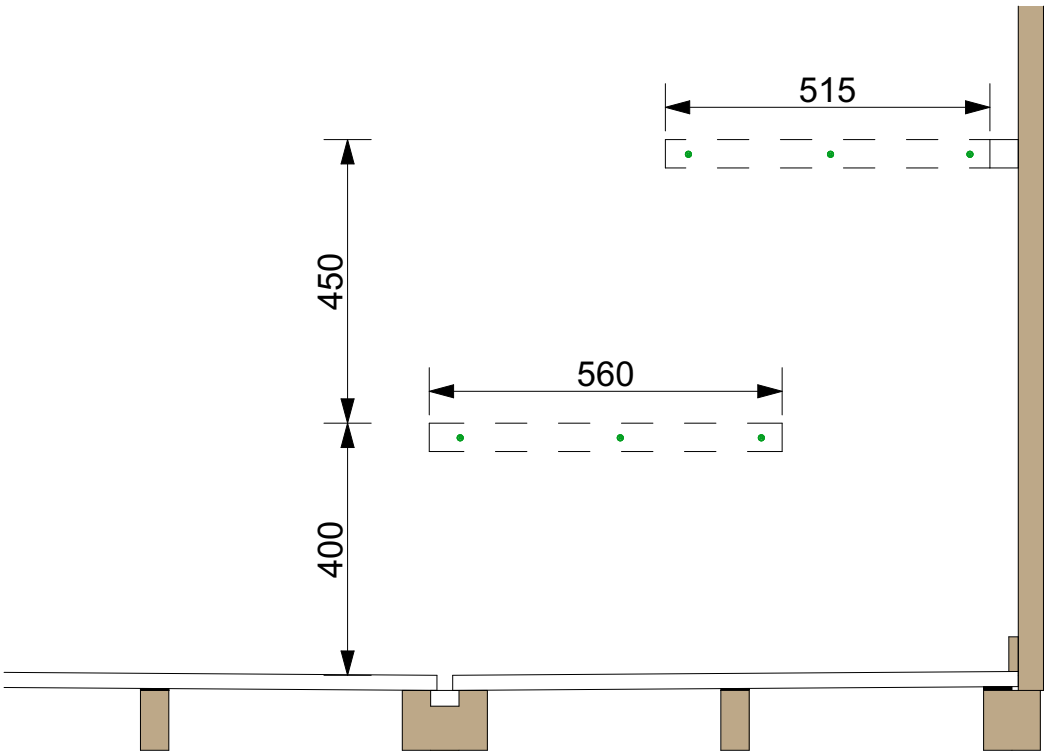

Sauna Benches

2. Lift upper and lower bench on top of the supports

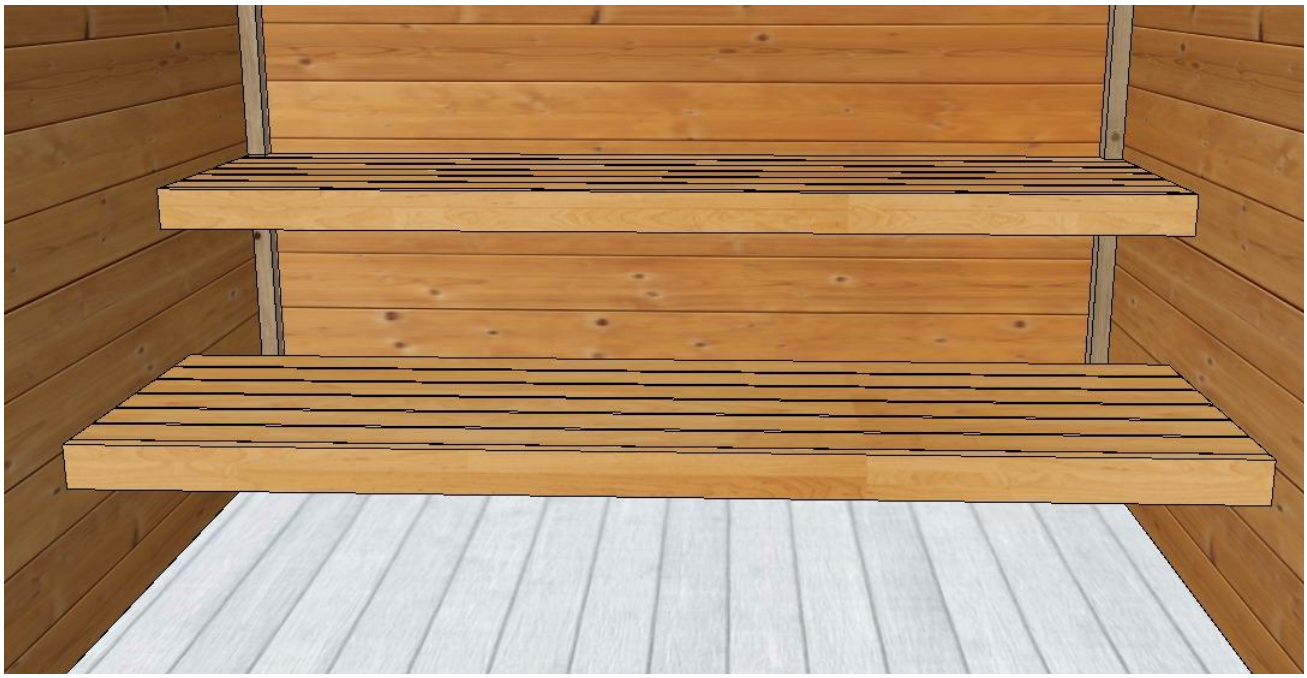

Sauna Benches

3. Fix L- Bench support to the upper bench

4. Fix Bench framing to the wall.

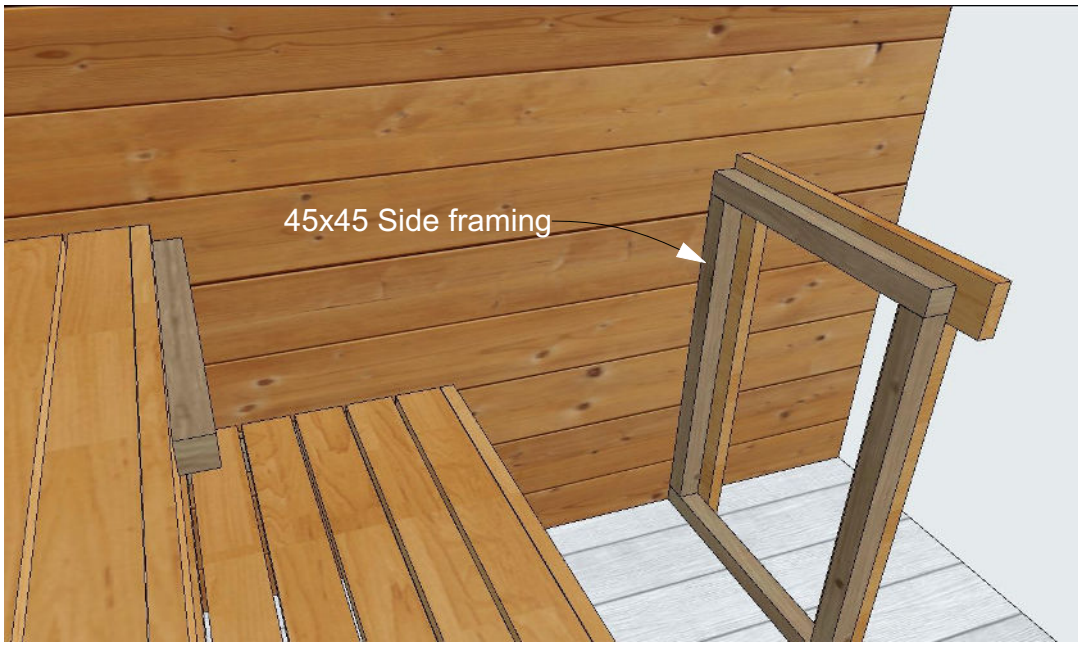

5. Lift the L Bench on top of the support/ framing.

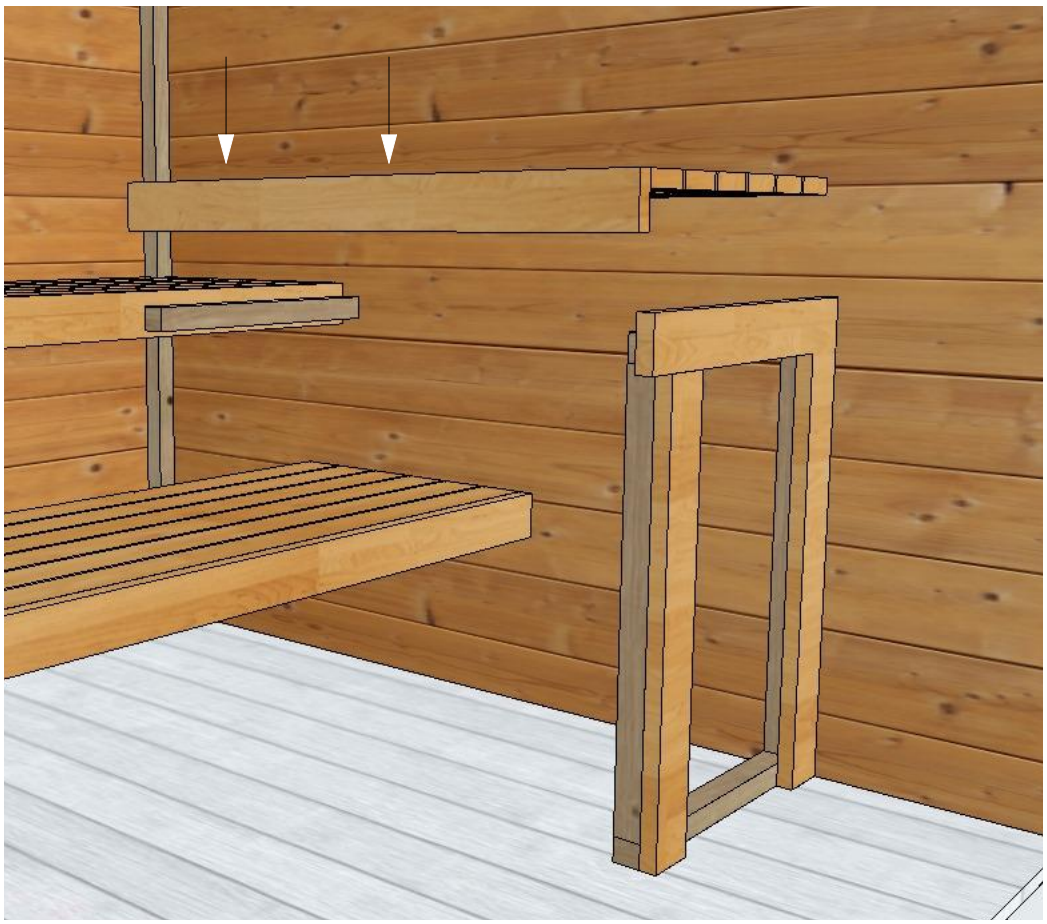

6. Attatch this piece to the bench support framing. (If not already installed in factory)

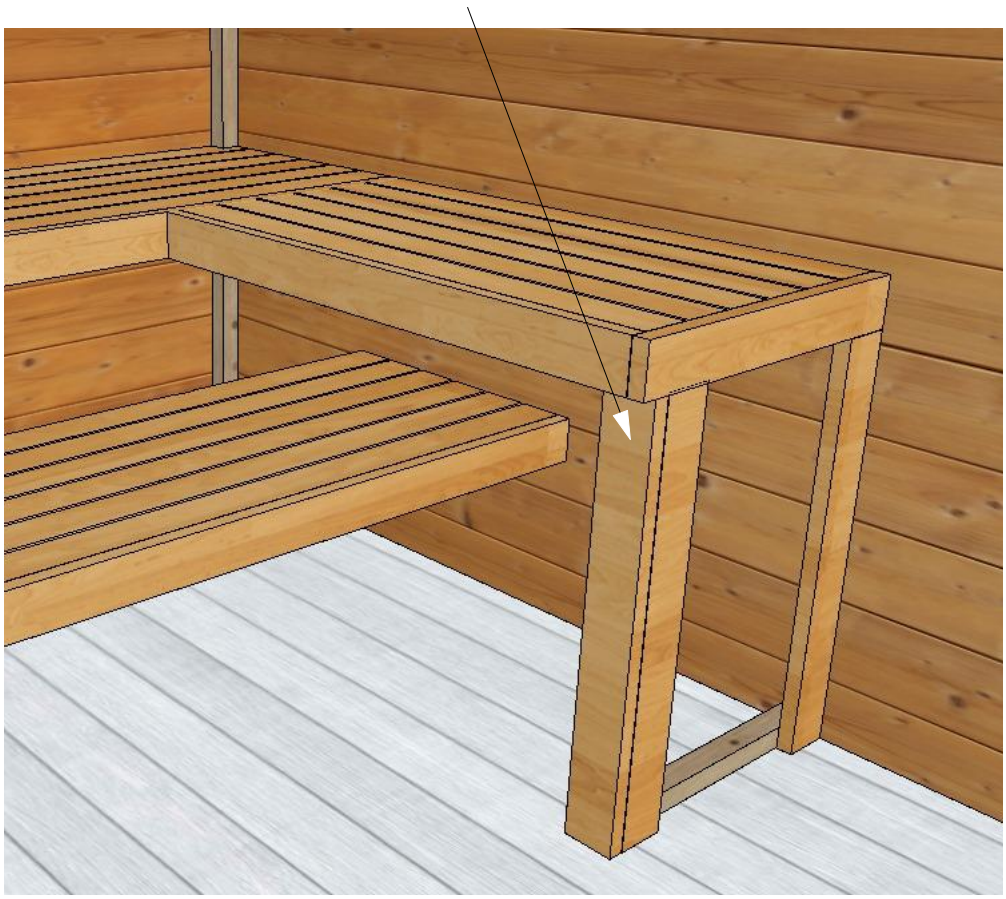

If needed, install extra supports.

Ventilation Louvre and ventilation grid

∅ =10cm

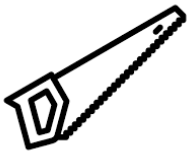

To install ventilation louvre and ventilation grid use saw or diamond drill bit.

Ventilation louvre wood

Ventilation grid

EPDM roof cover

Tools:

SAFETY FIRTS!

IT IS RECOMMENDED TO USE GLOVES, SAFETY GLASSES AND RESPIRATOR WHEN APPLYING THE GLUE. ALSO APPLYING OF THE GLUE SHOULD BE DONE IN WELL VENTILATED AREA OR OUTSIDE!

1. Clean the roof surface from dirt, dust, ice , snow etc...
2. Check for defects before installing the roof cover.
3. Put the rubber roof cover in position and check for correct overhang.
4. Fold or roll the rubber roof cover and start applying the glue.
5. Apply the glue on the roof surface and on the rubber.
6. Wait until the glue is "Touch dry". (Nothing happens when the waiting time is too long)
7. Roll or fold the rubber roof cover in place, avoid air bubbles and wrinkles on the roof surface. Smoothen the roof cover with a broom or brush.
8. When the rubber roof cover is in place, cut the excess rubber.

1.
7.

3.

5.

8.

EPDM roof cover

Back metal profile and rubber roof cover:

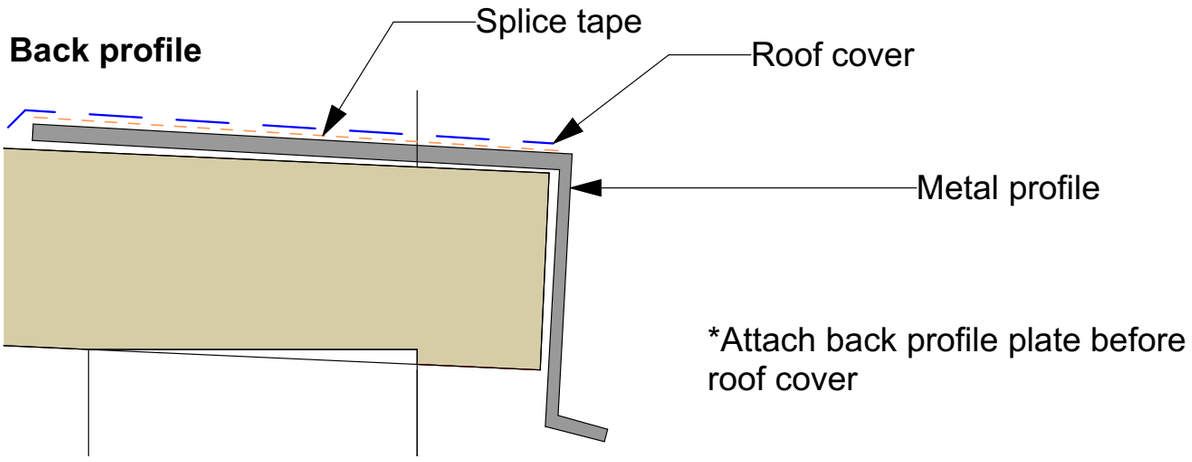

When installing the back profile apply Quicprime plus glue on top of the metal profile. Then apply the splice tape (2 sided) on top of the metal profile.

Use Quickprime plus glue and apply it on the rubber surface and on the metal roofing sheet

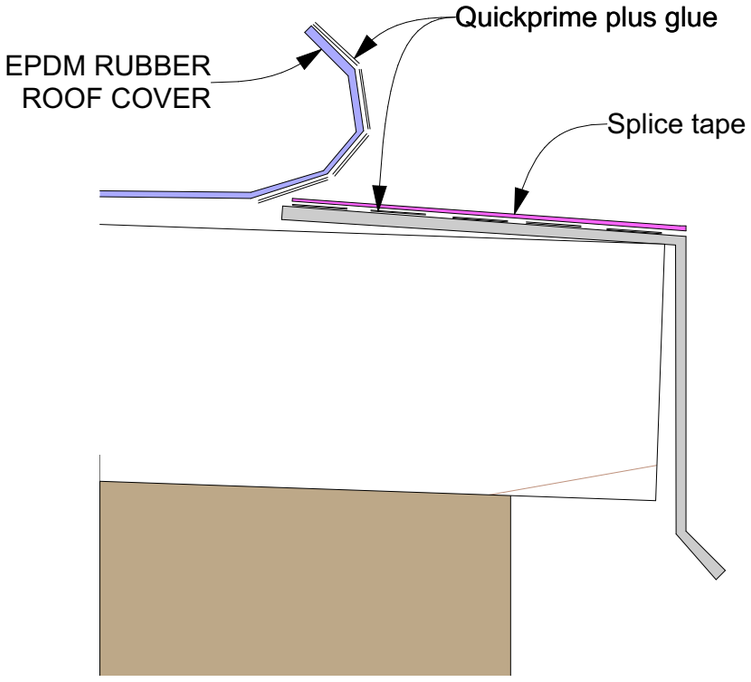

Remove the top side of the splice tape and apply the glued rubber roof cover on top of the tape

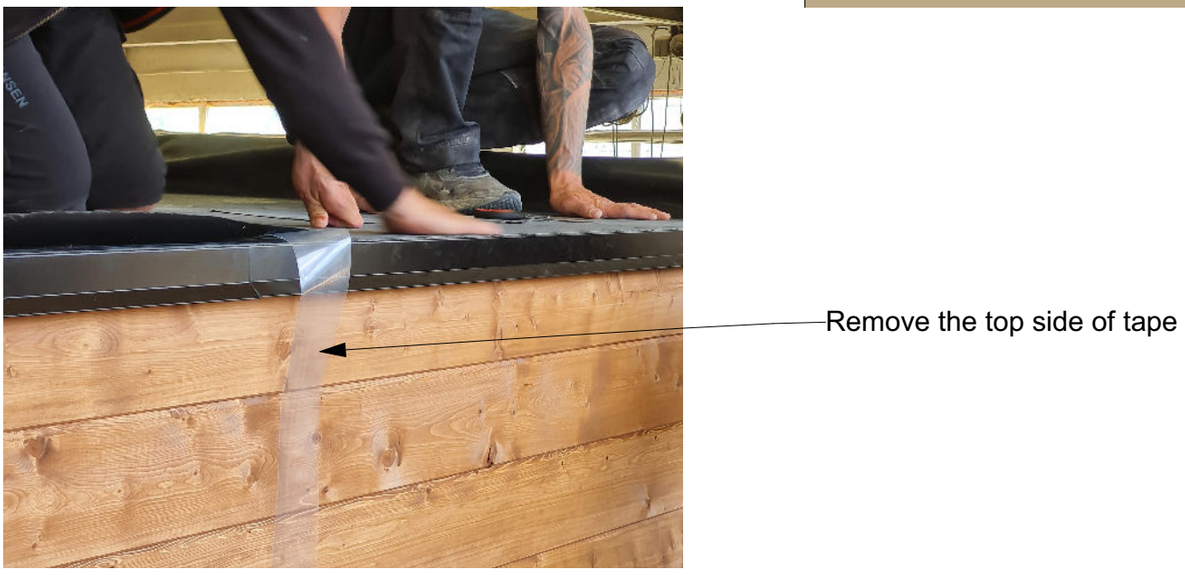

Patio metal roof profiles

Side and front profile

Back profile

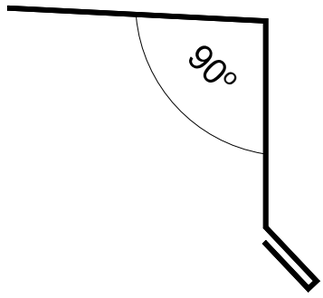

*If there is 2 pieces of back profile, leave about 10-20mm overlap and fix with screws

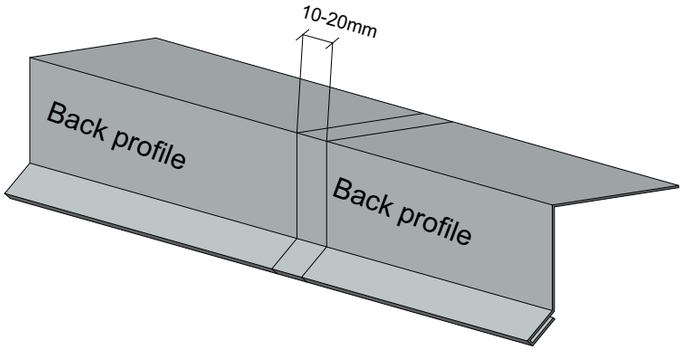

Back corner:

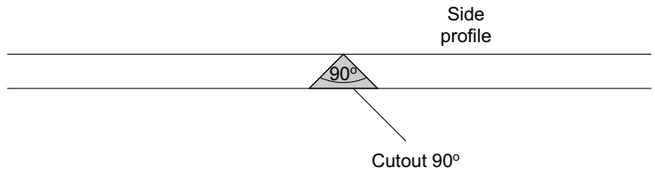

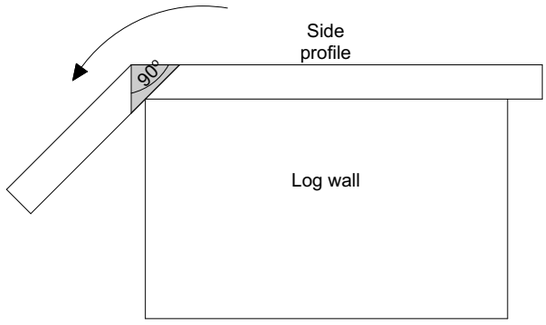
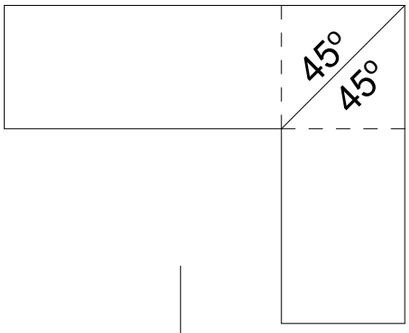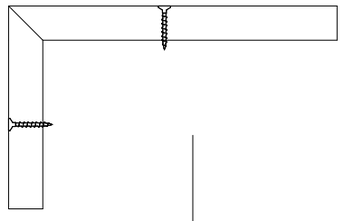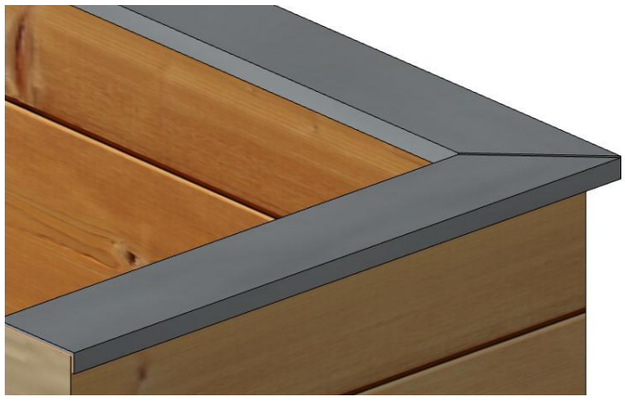
Front corner: