Patio M Sauna

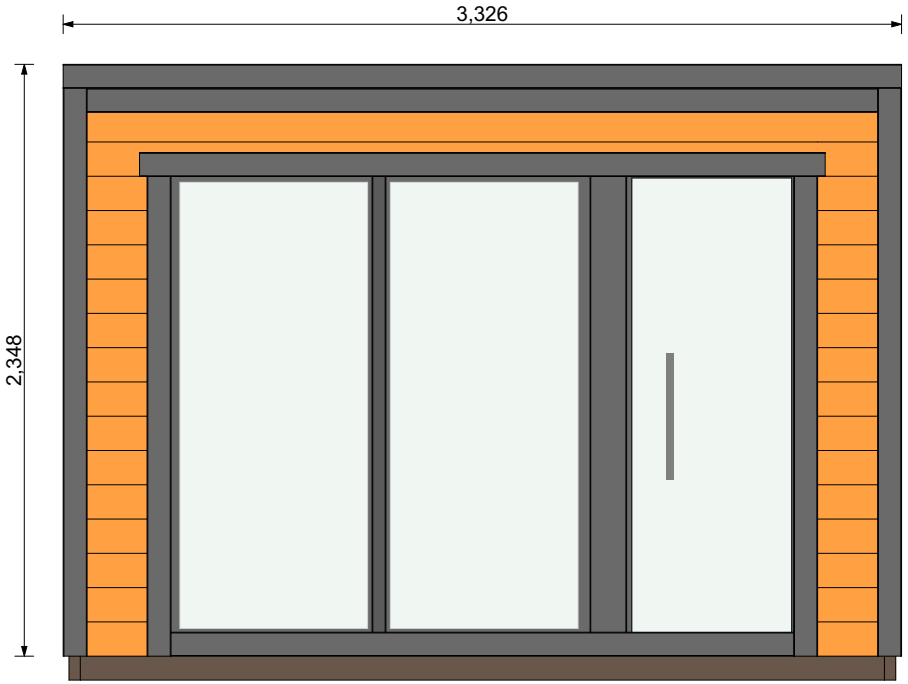

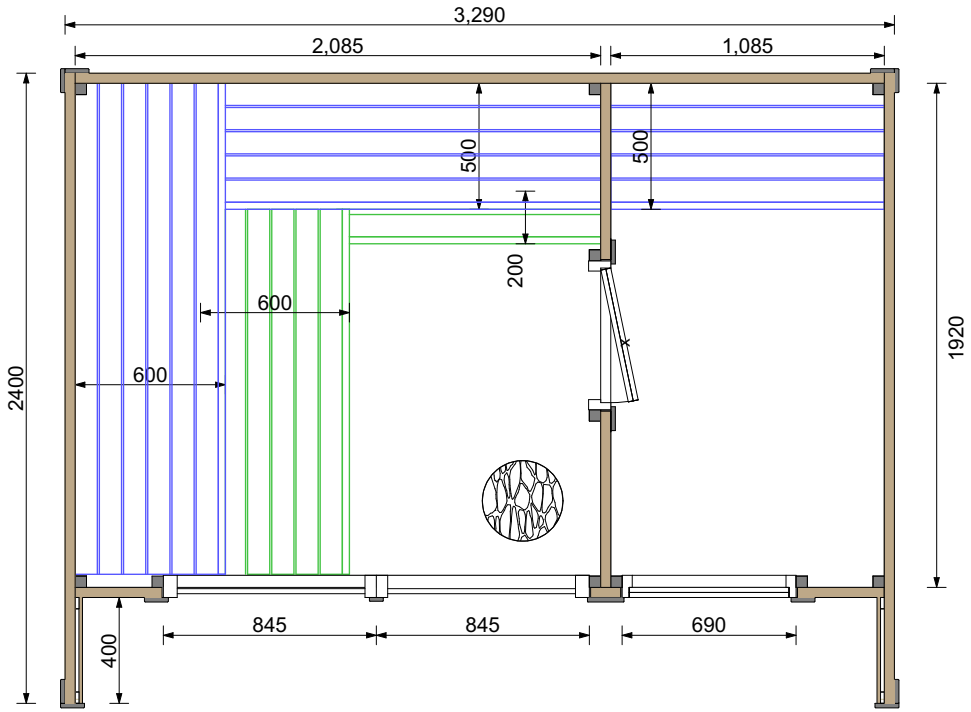

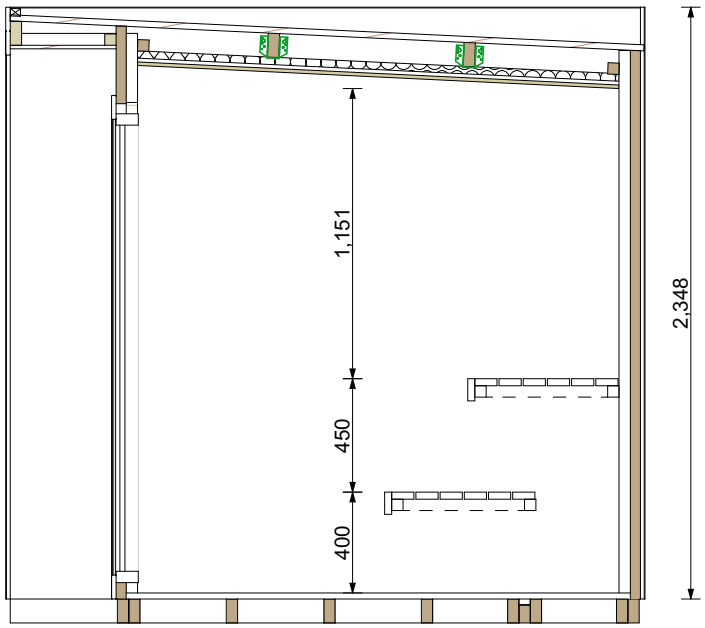

Patio M Installation Manual

PATIO M

Marking		*Note*	Lenght	pcs
01	40x146 WALL LOG		**3210**	**16**
EXTRA	40x146 WALL LOG		**3210**	**1**
01B	40x146 WALL LOG	*Width 136 (drawing)*	**3210**	**1**
01C	40x146 WALL LOG	*Width 68 (drawing)*	**3210**	**1**
01D	40x146 WALL LOG	*Cutout (drawing)*	**3210**	**1**
01E	40x146 WALL LOG	*Cutout (drawing)*	**3210**	**1**
01F	**40x30** WALL LOG	*30x40 Roof Block*	**3210**	**1**
02	40x146 WALL LOG		**2400**	**32**
02B	40x146 WALL LOG	*Width 136 (drawing)*	**2400**	**2**
03B	40x146 WALL LOG	*Cutout (drawing)*	**1920**	**1**
03C	40x146 WALL LOG	*Cutout (drawing)*	**1920**	**1**
03D	40x146 WALL LOG	*Cutout (drawing)*	**1920**	**1**
04B	**40x120** WALL LOG	*Width 120 (drawing)*	**1875**	**1**
05	40x146 WALL LOG		**660**	**13**
06	40x146 WALL LOG		**560**	**13**
07	40x146 WALL LOG		**345**	**26**
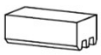	HAMMER BLOCK			**2**

PATIO M

CUTOUT DRAWINGS

01B	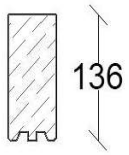	*Width 136*	**3210**	**1**
01C	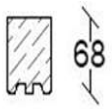	*Width 68 Half log*	**3210**	**1**
01D	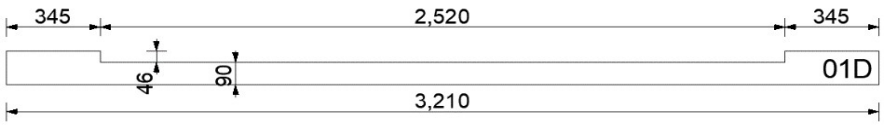		**3210**	**1**
01E	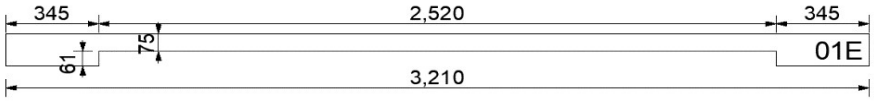		**3210**	**1**
01F	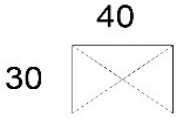	*30x40 Block For roof*	**3210**	**1**
02B	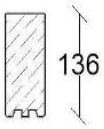	*Width 136*	**2400**	**2**
03B	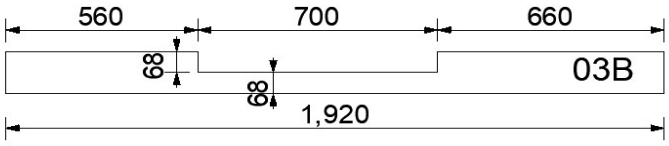		**1920**	**1**
03C	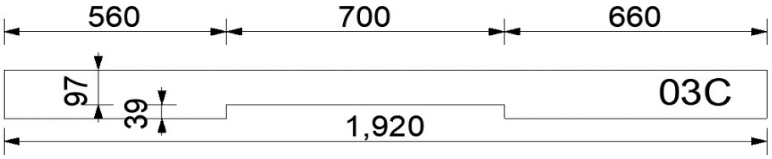		**1920**	**1**
03D	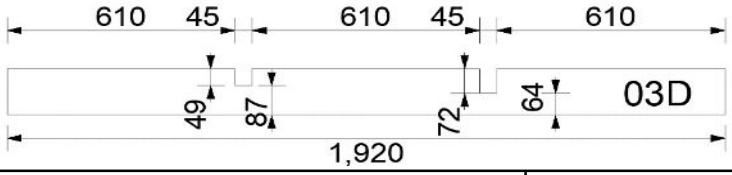		**1920**	**1**
04B	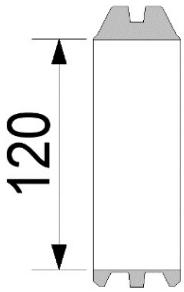	**Width 120**	**1875**	**1**

PATIO M

Marking		*Note*	Lenght	pcs
AR-1	45x95 FLOOR FRAME		**3190**	**4**
AR-2	45x95 FLOOR FRAME		**2395**	**1**
AR-2A	45x95 FLOOR FRAME	*Cutout (drawing)*	**2395**	**1**

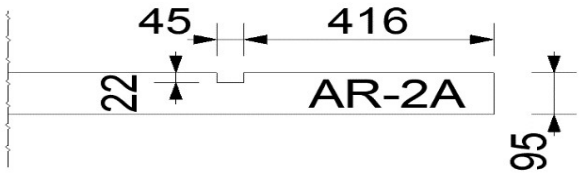

AR-3	45x95 FLOOR FRAME		**2075**	**5**
AR-4	45x95 FLOOR FRAME		**1810**	**1**
AR-5	45x95 FLOOR FRAME		**1070**	**4**
AR-6	**45x70** FLOOR FRAME	***45x70!***	**2075**	**1**

PATIO M

KL-1	24x120 ROOF BOARD		**2426**	**29+2**
PL-1	24x120 FLOOR BOARD		**1910**	**10+2**
PL-2	24x120 FLOOR BOARD		**1495**	**19+1**
PL-3	24x120 FLOOR BOARD		**385**	**19+1**
T-1	45x95 BEAM	**45x95!**	**3210**	**1**
T-2	45x95 BEAM	**45x95!**	**3205**	**2**
T-3	45x45 BEAM		**3210**	**1**
EXTRA	45x45 BEAM/ FRAME		**3210**	**1**
P-1	45x45 CORNER POST		**2240**	**2**
P-2	45x45 CORNER POST		**2170**	**3**
T-4	45x45 BEAM/ FRAME		**1995**	**2**
UR-1	45x45 DOOR FRAME		**1950**	**6**
UR-2	45x45 DOOR FRAME		**1690**	**2**
T-5	45x45 BEAM/ FRAME		**1040**	**1**
T-6	45x45 BEAM/ FRAME		**995**	**1**
UR-3	45x45 DOOR FRAME		**690**	**4**

PATIO M				
Marking		***Note***	**Lenght**	**pcs**
EXTRA	18x95 MOULDING		**3400**	**2**
L-1	18x95 ROOF MOULDING		**3326**	**1**
L-2	18x95 ROOF MOULDING		**3136**	**1**
UL-1	18x95 DOOR MOULDING		**2710**	**1**
UL-2	18x95 DOOR MOULDING		**2460**	**1**
L-3	18x95 ROOF MOULDING		**2400**	**2**
L-4	18x95 CORNER MOULDING	***Oversize 30mm***	**2350**	**2**
L-5	18x95 CORNER MOULDING	***Oversize 30mm***	**2250**	**6**
UL-3	18x95 DOOR MOULDING		**1920**	**2**
UL-4	18x95 DOOR MOULDING		**1840**	**2**
UL-5	18x95 DOOR MOULDING		**890**	**1**
UL-6	18x95 DOOR MOULDING	***18x145!***	**1835**	**1**
UL-7	18x95 DOOR MOULDING	***15x55!***	**1835**	**1**
DI-0	45x45 CORNER MOULDING		**2100**	**5+1**
DI-1	15x55 DISTANCE BOARD OUTER LINING BOARDS		**2170**	**4**
DI-2	15x55 DISTANCE BOARD INSULATION		**2080**	**2**
DI-3	15x55 DISTANCE BOARD INSULATION		**1995**	**2**
DI-4	15x55 BASE- AND CEILING BOARDS		**~2.2**	**15+2**
PATIO M				
STP-1	14x121 CEILING LINING BOARDS		**1910**	**29+2**
STP-2	14x121 OUTSIDE LINING BOARDS		**400**	**69+2**
	SLOPE DETAIL UNDER FLOOR BOARD 3MM		**2070**	**2**
	SLOPE DETAIL UNDER FLOOR BOARD 6MM		**2070**	**1**
	SLOPE DETAIL UNDER FLOOR BOARD 9MM		**2070**	**1**
	SLOPE DETAIL UNDER FLOOR BOARD 12MM		**2070**	**1**

PATIO M

Marking		*Note*	Lenght	pcs
	SAUNA BENCH 600x1787			1
	SAUNA BENCH 600x1787			1
	SAUNA BENCH 500x1482			1
	SAUNA BENCH 500x1080			1
	SAUNA BENCH 200x1041			1
	BENCH SUPPORT SET 45x45			1
	BENCH SUPPORT SET 1036x829 (SIDE) + ADJUSTABLE LEGS 20mm 3pcs			1
	GLASS DOOR 88x690x1860 BRONZE PREMIUM HANDLE	*WITHOUT FRAME!*		1
	GLASS DOOR 88x690x1860 BRONZE			1
	WINDOW 88x845x1860 BRONZE	*WITHOUT FRAME!*		2
	SPU INSULATION 30x600x1200			**6**
	FOIL TAPE 10M			**1**
	WATER DRAINAGE DETAIL 20mm		2085+	**1**
Marking		***Note***	**Lenght**	**pcs**
	JOIST HANGER 45x97			4
	SCREW 5x40 FOR JOIST HANGER			40
	SCREW 6x180 FOR WALL LOGS			200
	SCREW 5x90 FOR FLOOR FRAME			200
	SCREW 4.5x70 WALL LOGS SAUNA BENCHES			600
	SCREW 3x40 DOOR- AND WINDOW MOULDINGS			200
	SCREW 3.5x50 FLOORBOARD			300
	NAIL 40 LINING BOARDS			400
	NAIL 70 ROOF BOARDS			300
	VENTILATION LOUVRE WOOD D100			1
	VENTILATION GRID D100			3
	ADJUSTABLE LEG 20MM			3

ROOF COVER

	SCREWS FOR ROOF DETAILS		100	**pcs**
	EPDM ROOF COVER 3.5x3.05		10.7	**m2**
	EPDM GLUE 2.6l		2.6	**L**
	EPDM QUICKPRIME (LITTLE CONTAINER)		1	**pcs**
	EPDM SPLICE TAPE		3300	**mm**
	PAINT ROLLER+ HANDLE		1	**pcs**
	METAL ROOFING SHEET 1615mm	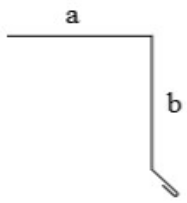		**2**
	METAL ROOFING SHEET 63mm WIDTH	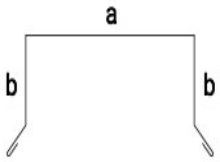	2600	**2**
			1660	**2**

Floor Frame

PATIO M

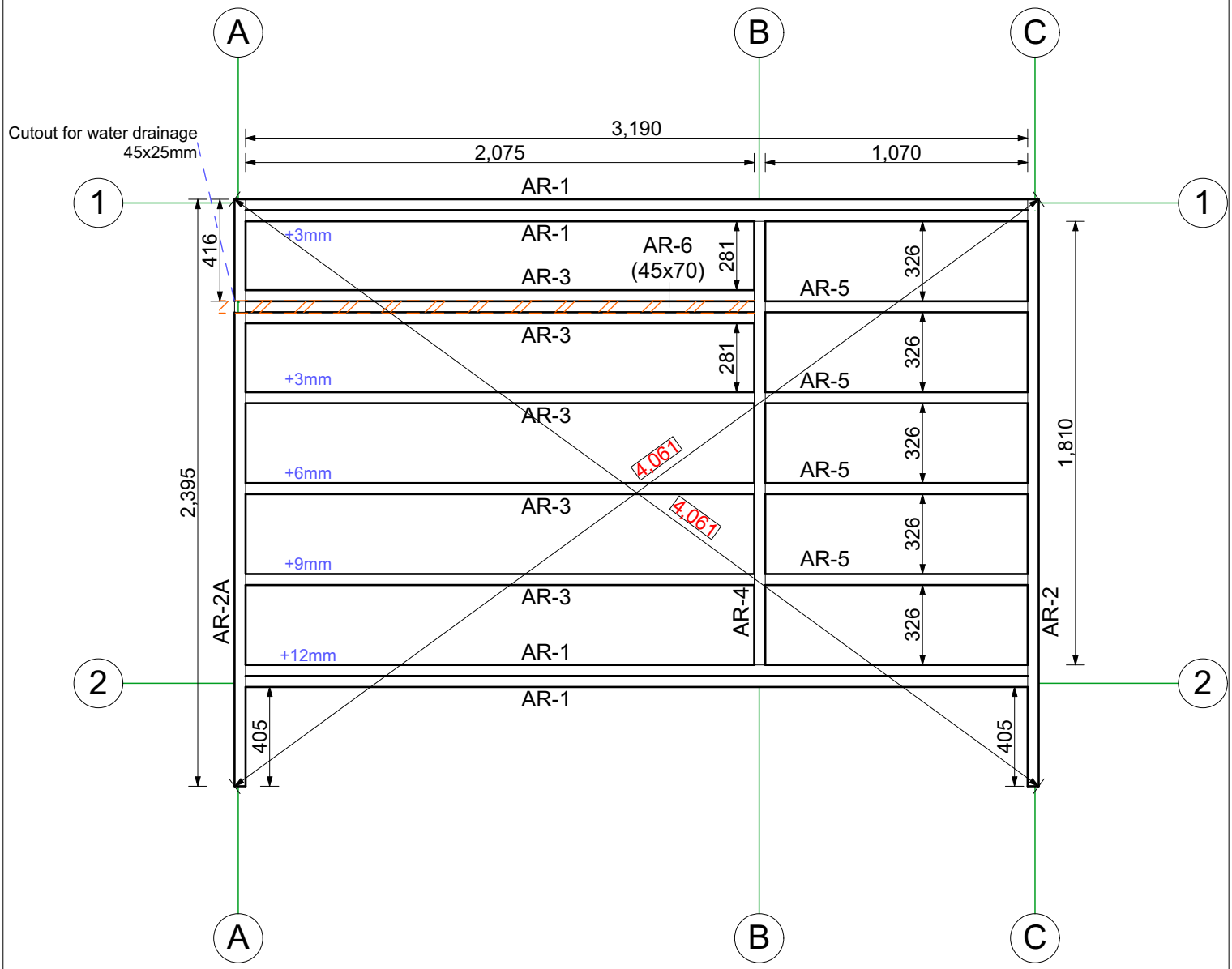

*Check floor frame diagonals

AR-1 = 3190mm	4pcs
AR-2 = 2395mm	1pcs
AR-2A=2395mm	1pcs
AR-3 = 2075mm	5pcs
AR-4 = 1810mm	1pcs
AR-5 = 1070mm	4pcs
AR-6 = 2075mm (45x70)	1pcs

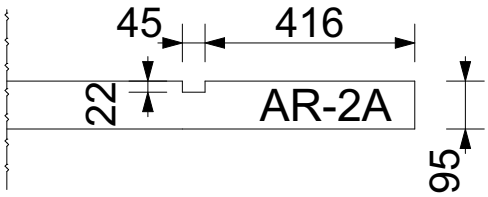

Floor Frame

PATIO M

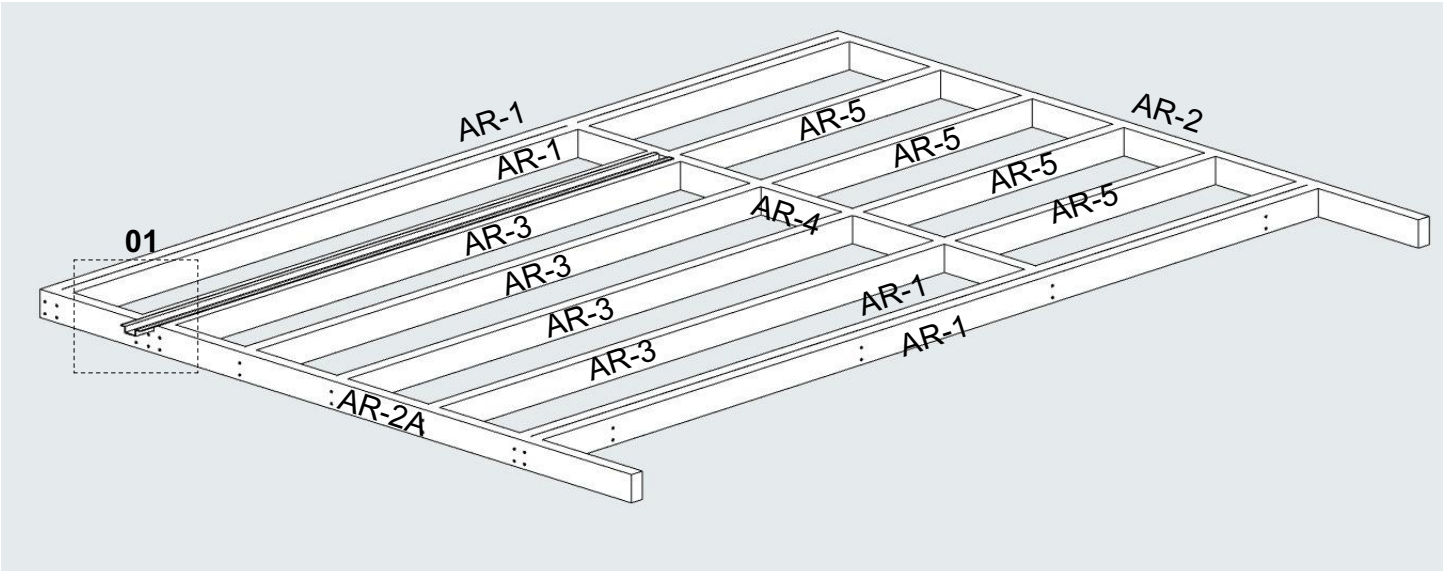

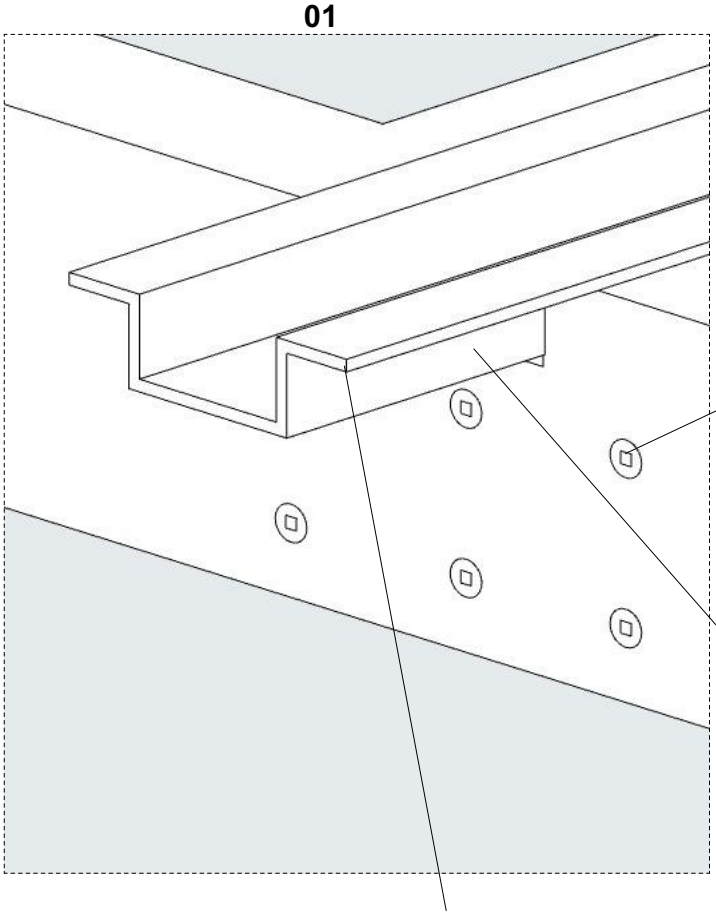

*Install water drainage detail before first log wall row

*Use 90mm screws and battery drill

First log row

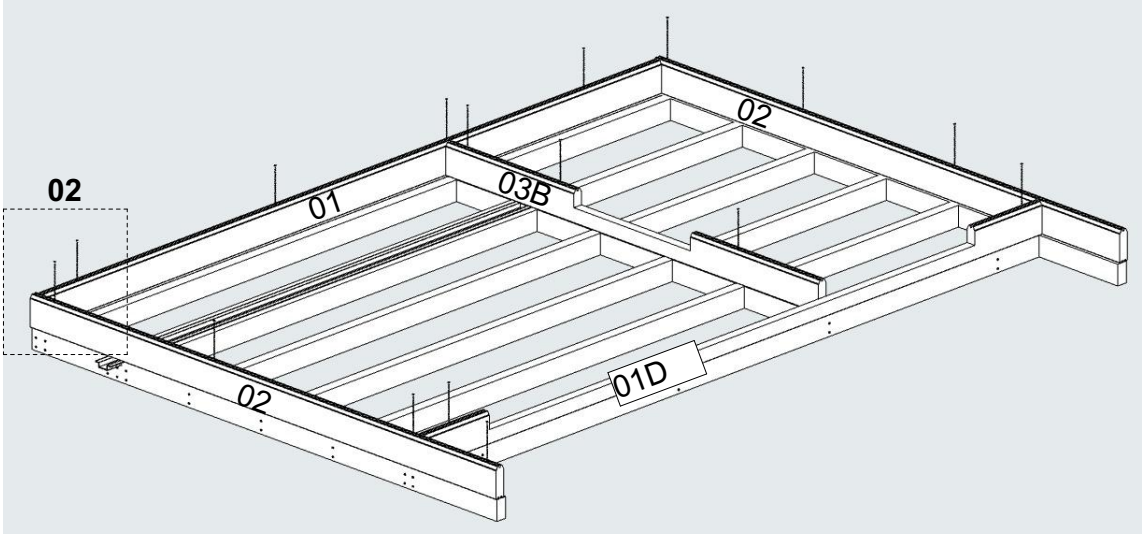

Fix first log wall row to the floor frame with 180mm screws
(Suggestion: drill hole before inserting the screws)

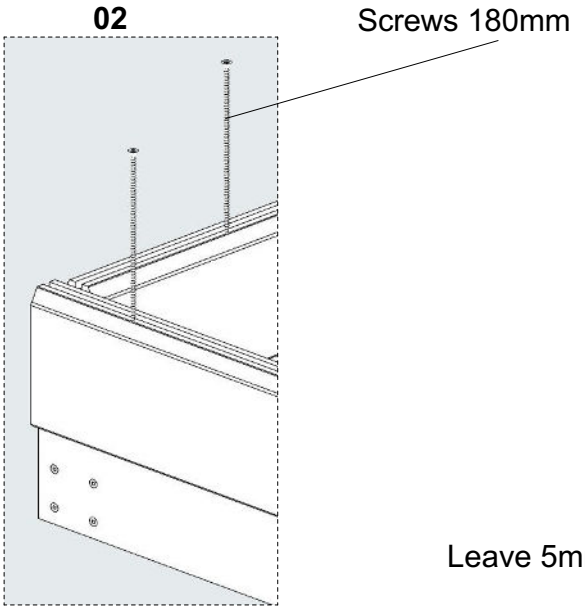

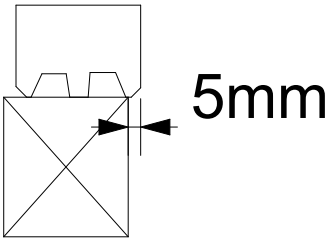

Leave 5mm gap outside with floor frame and 1st wall row

Posts

*Install 70mm screws as shown in scheme:

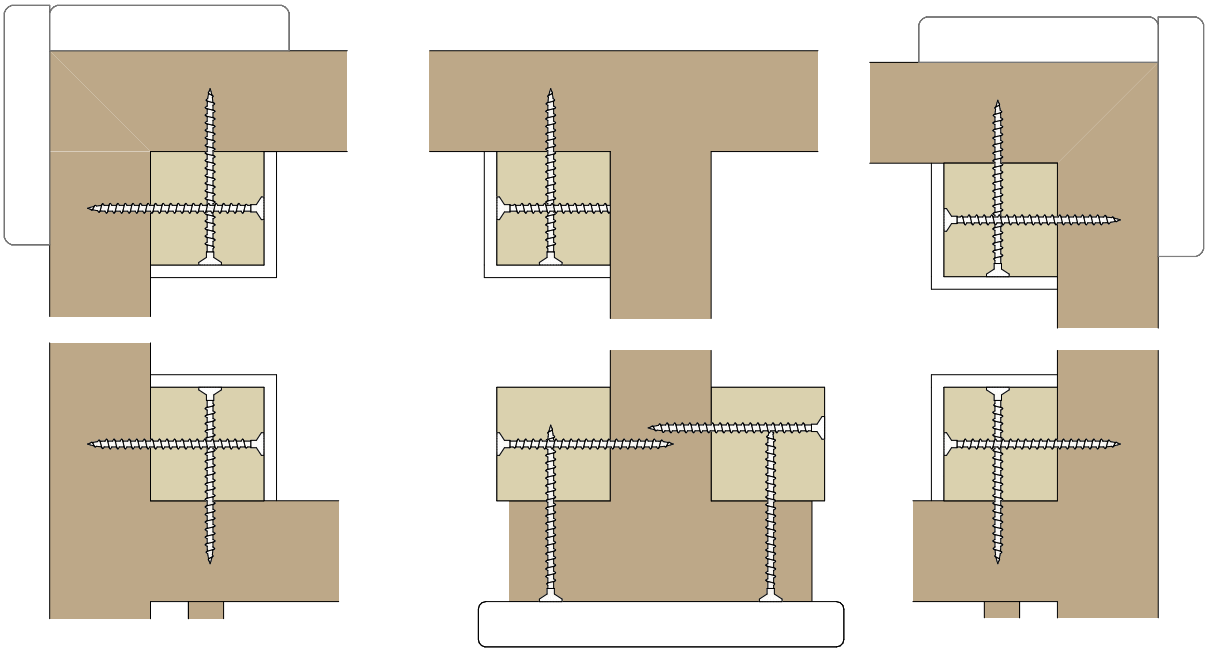

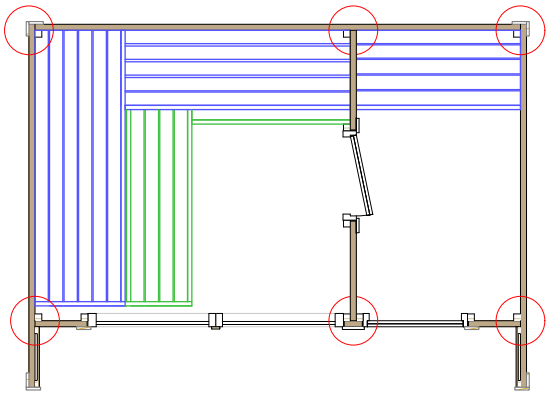

* Use level tool and battery drill to fix walls to posts

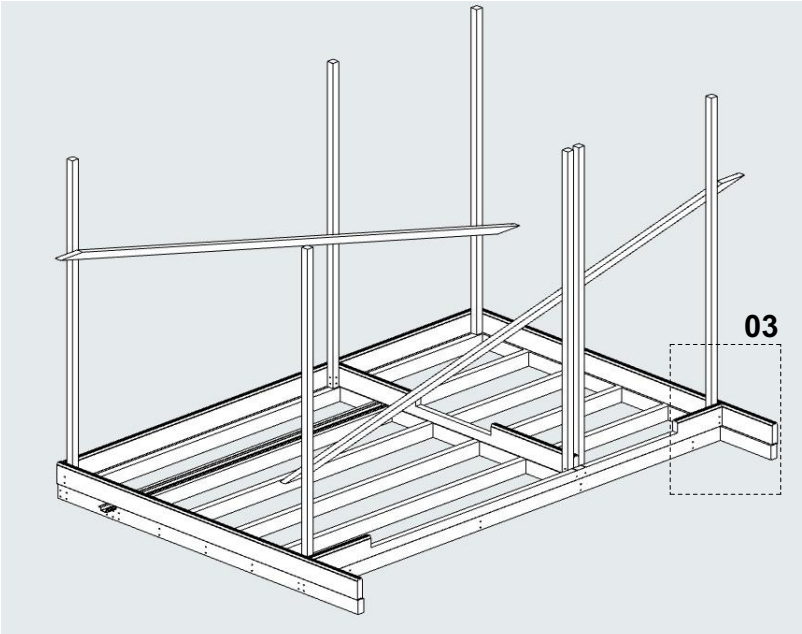

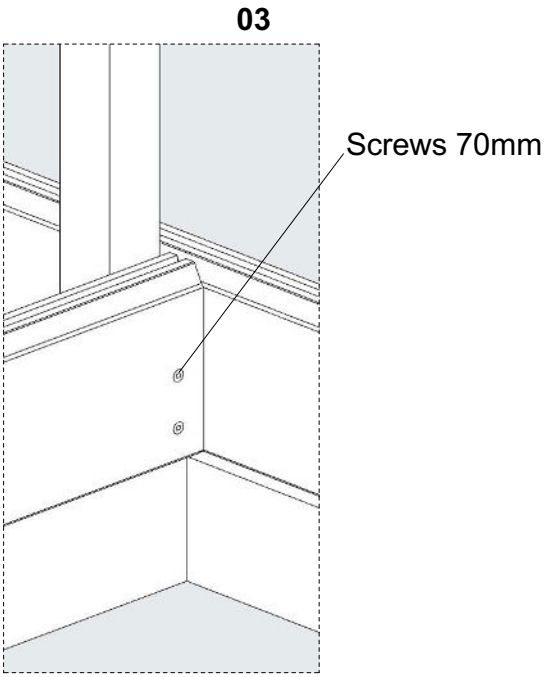

*2 screws per wall log connection

Wall layouts

*Fix all wall logs with 180mm and 70mm screws

PATIO M

Wall A (view from outside):

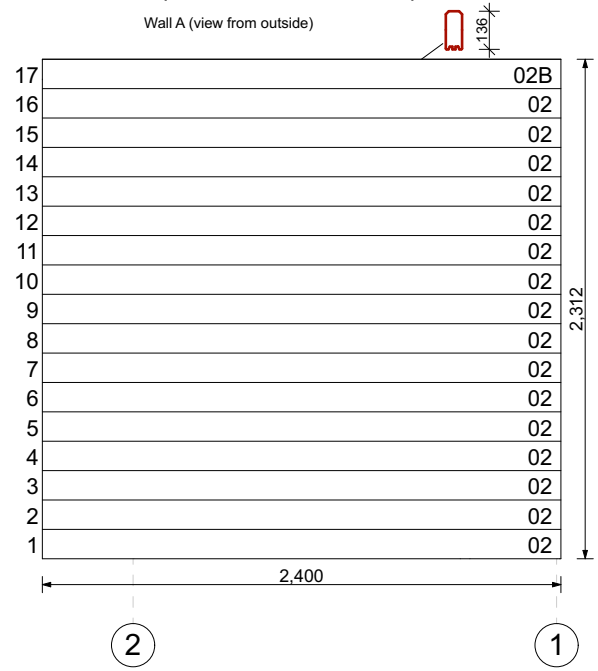

Wall B:

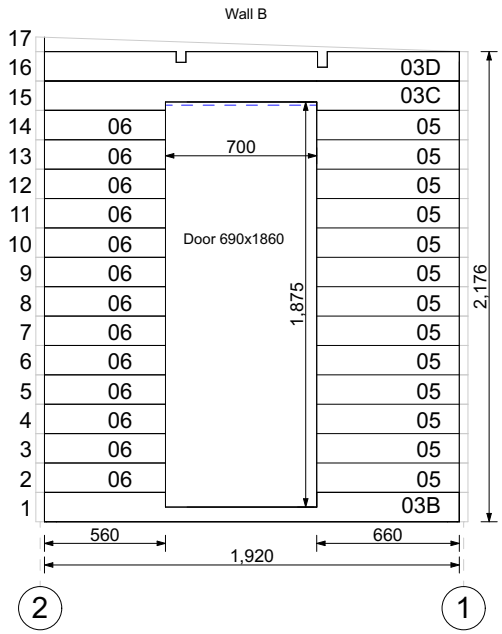

Wall C (view from outside):

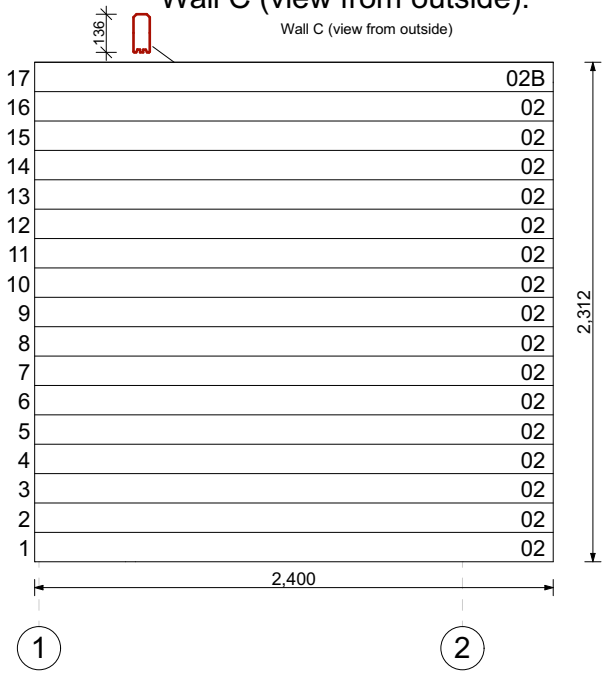

Wall 2 (view from outside):

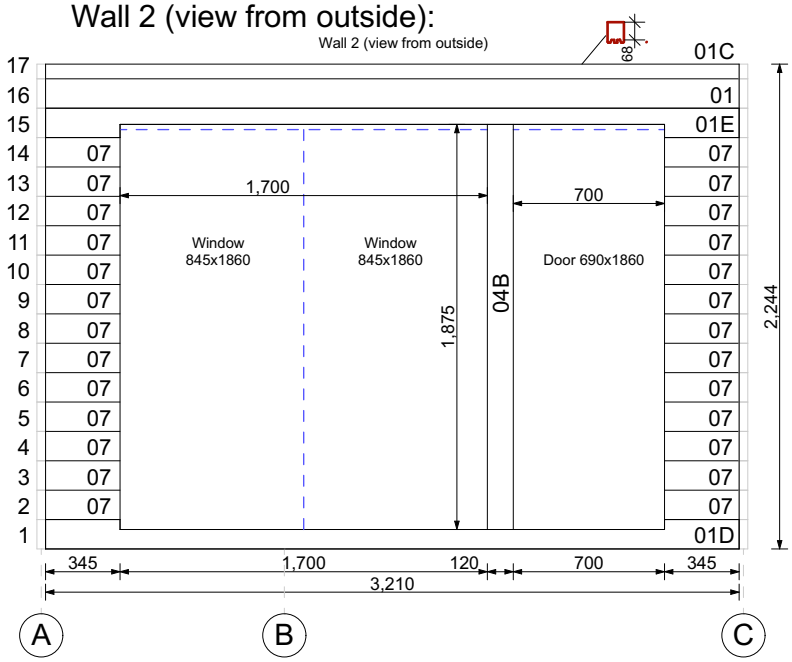

Wall 1 (view from outside):

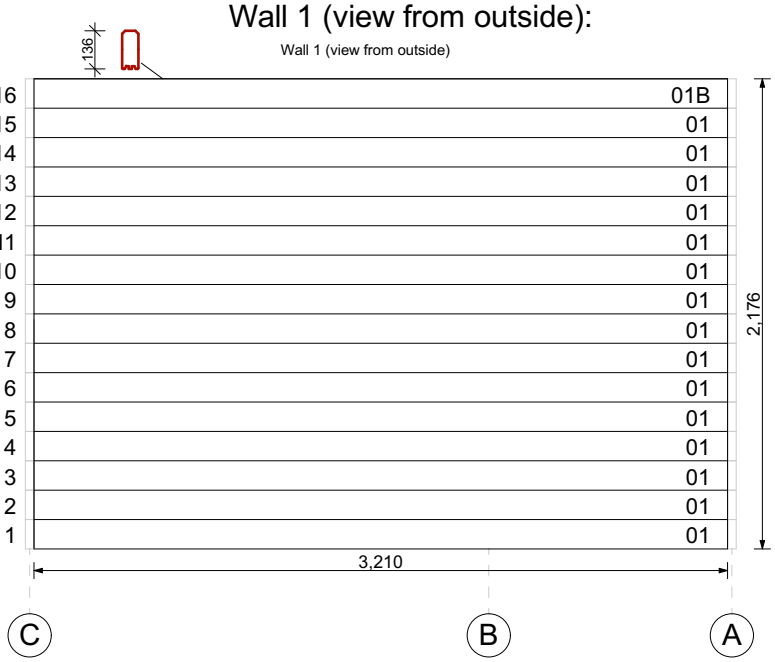

Top view:

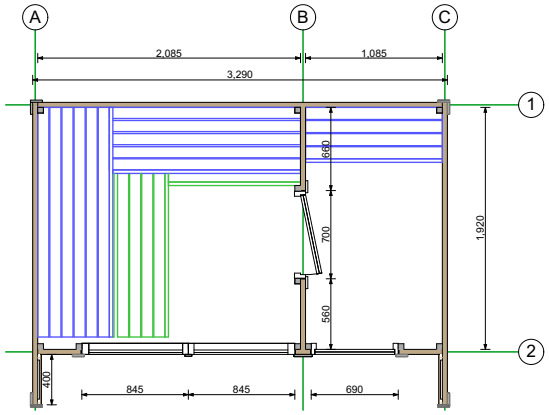

Last row

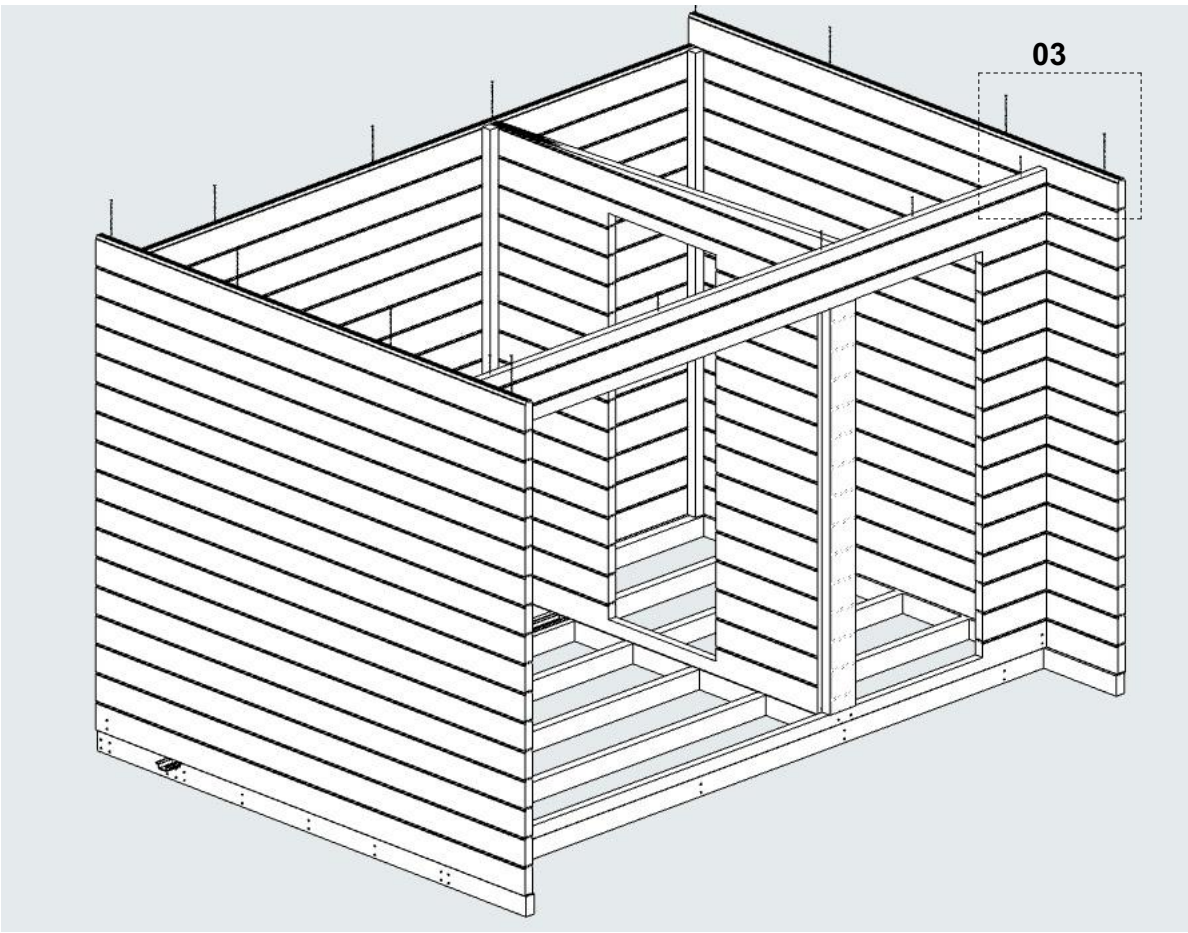

* To install wall logs use rubber hammer and hammer block

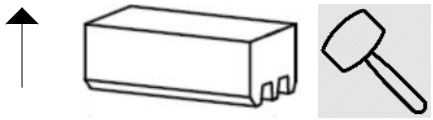

Install last wall detail to the second to last wall detail with 180mm/ 90mm screws
(Suggestion: drill hole before inserting the screws)

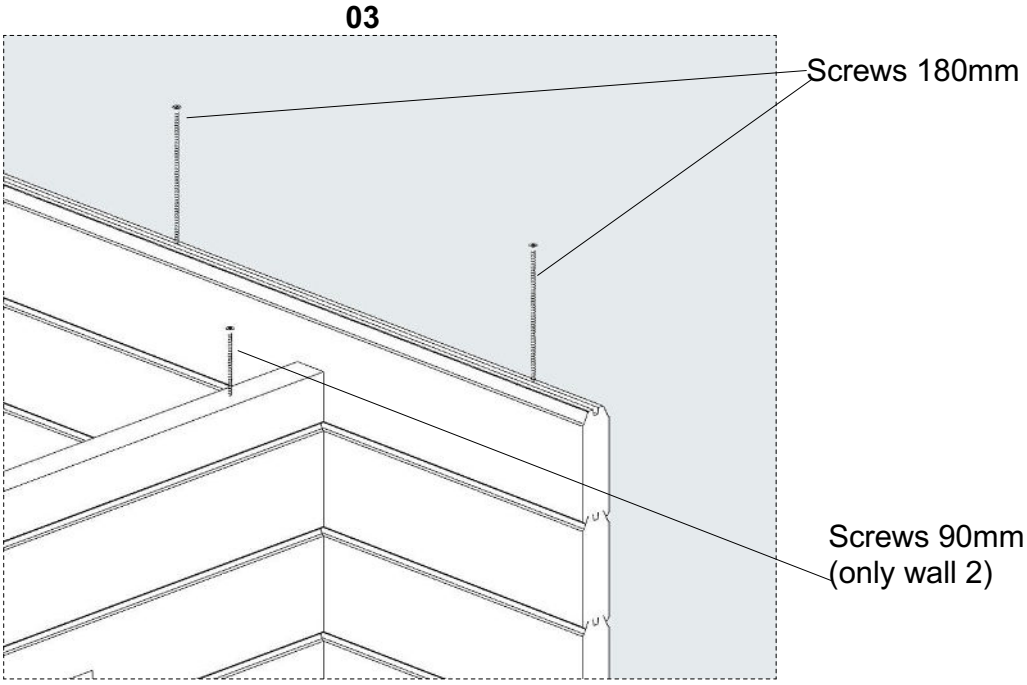

Ceiling beams and joist hanger

Temporarily attach roof board on top of the walls. Measure out 95mm from roof board (downward).
Measure out Joist hanger position as shown in scheme:

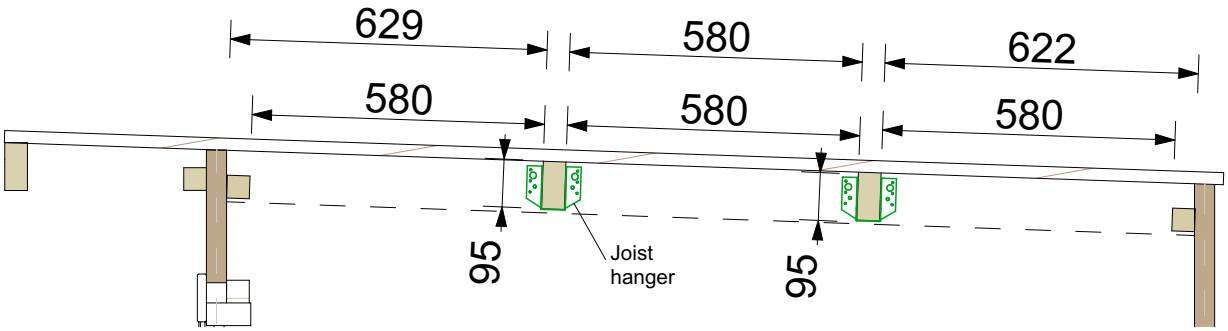

Top view

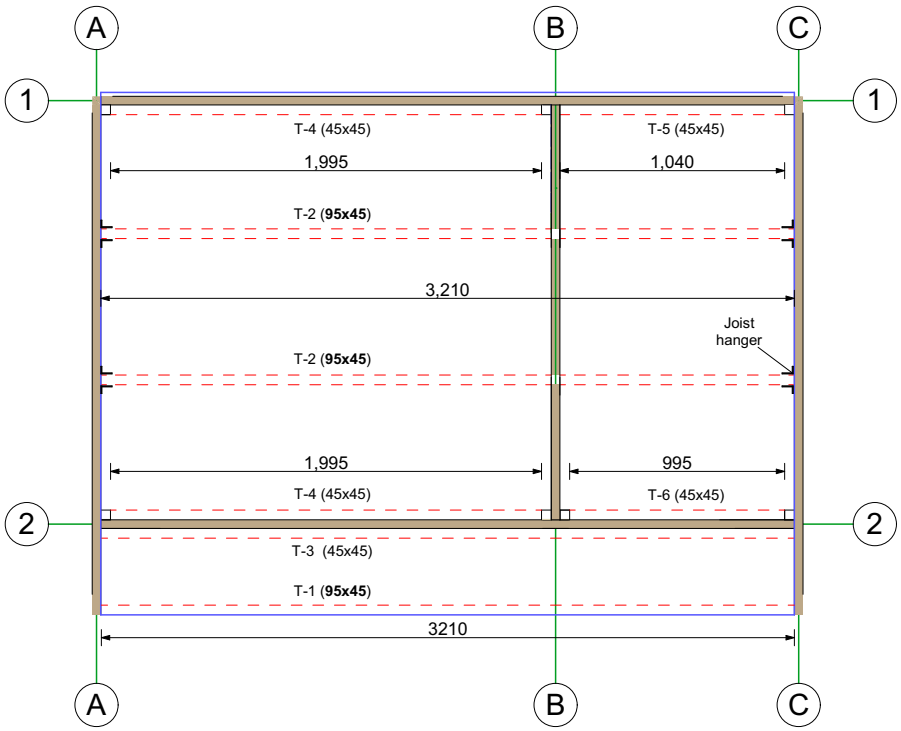

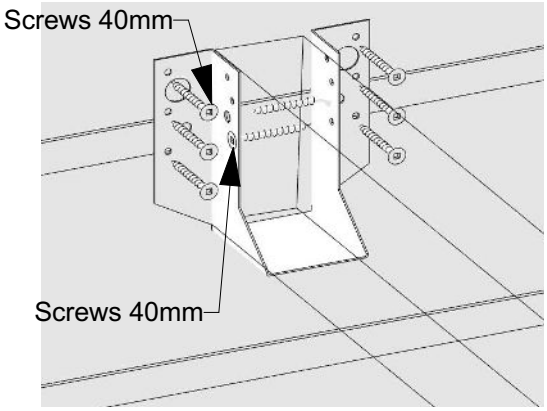

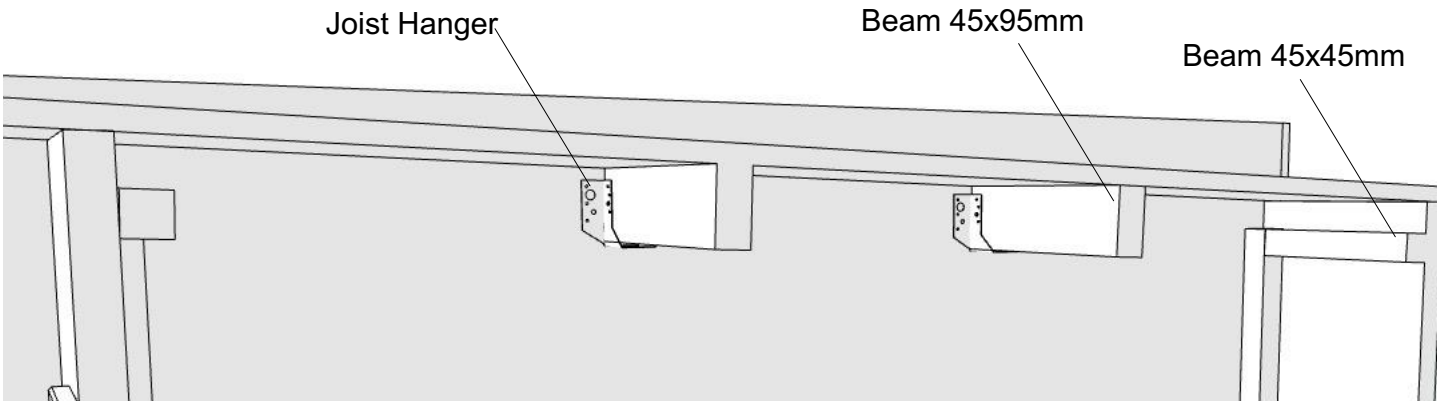

Roof boards

PATIO M

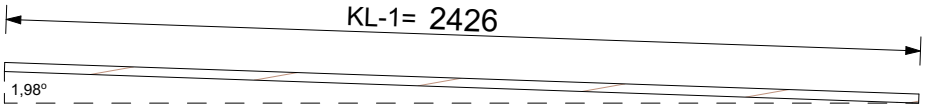

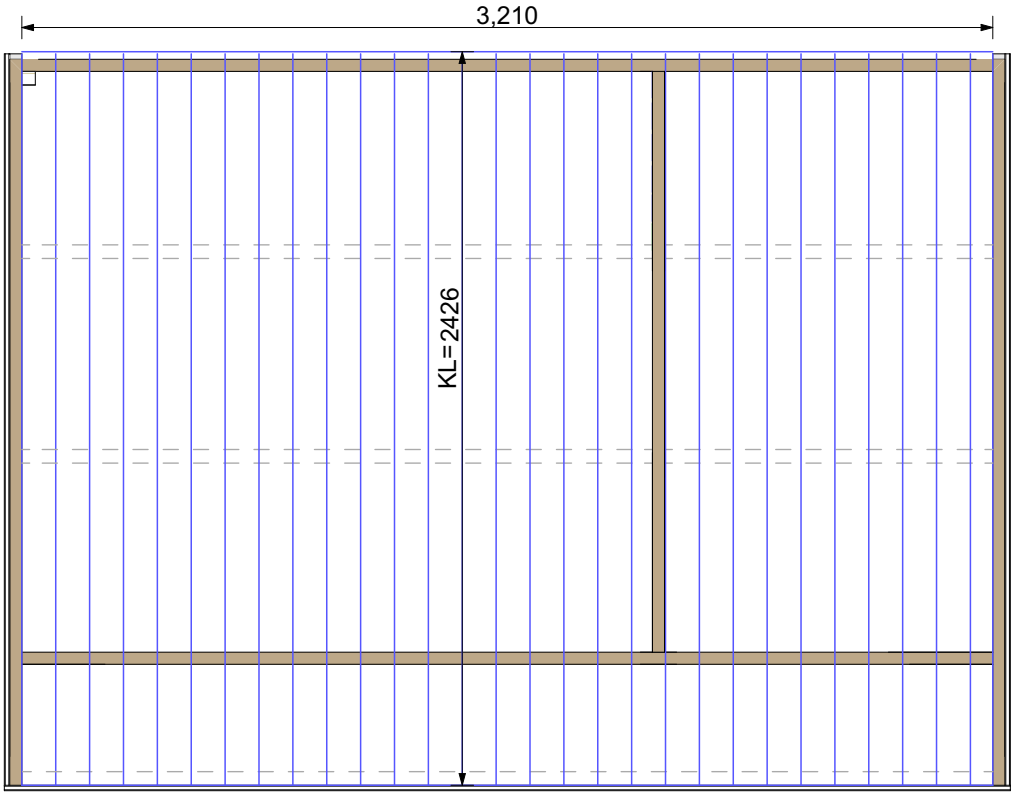

Cut the last roof board to lenght

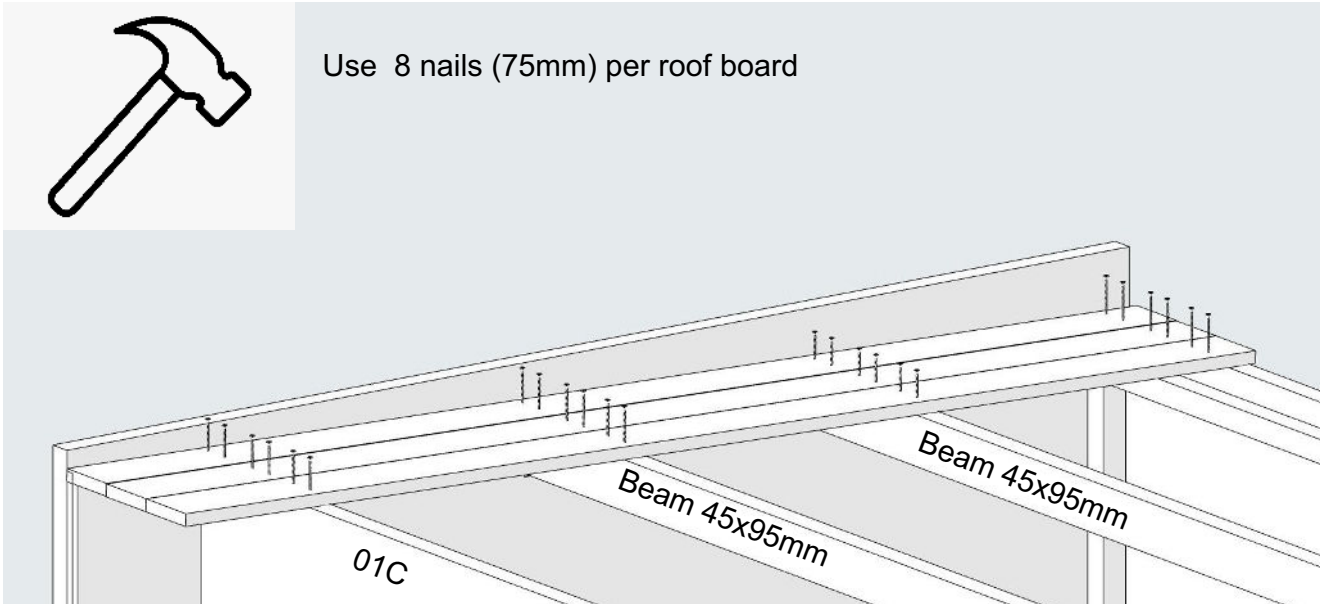

Ceiling

PATIO M

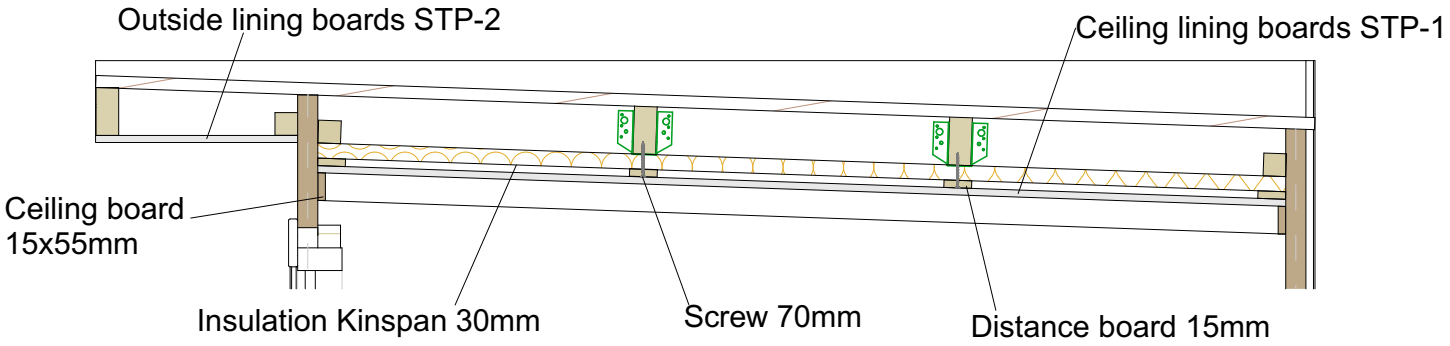

Use tape for SPU
insulation overlaps

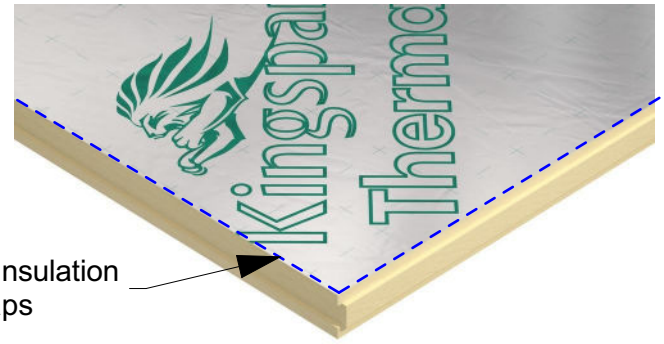

Install the SPU insulation to the beams/ rafters with the distance board and 70mm screws

Cut the last ceiling
board to lenght

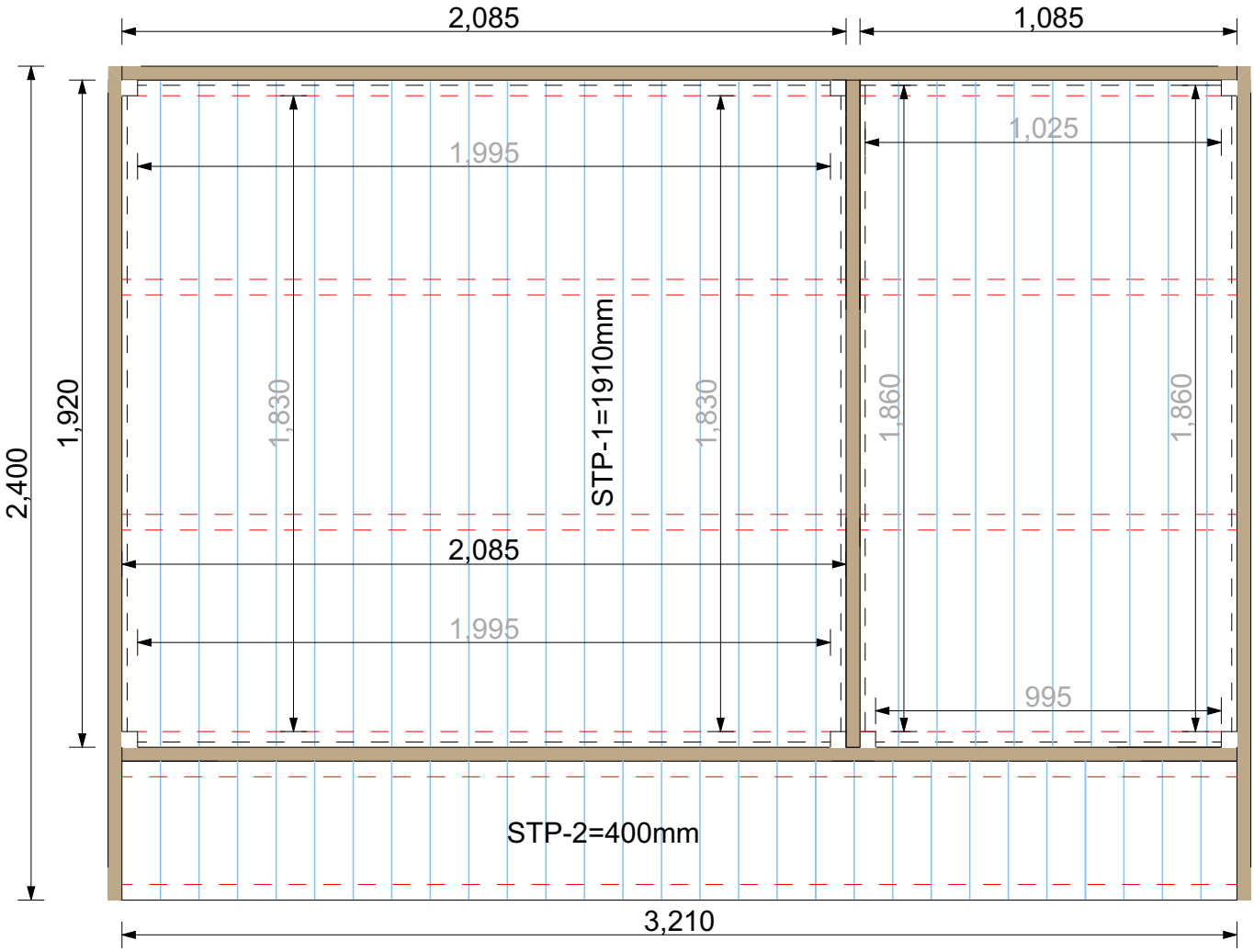

Floor Boards

PATIO M

Floor board cutoff (cut in site)
45x45mm in corners

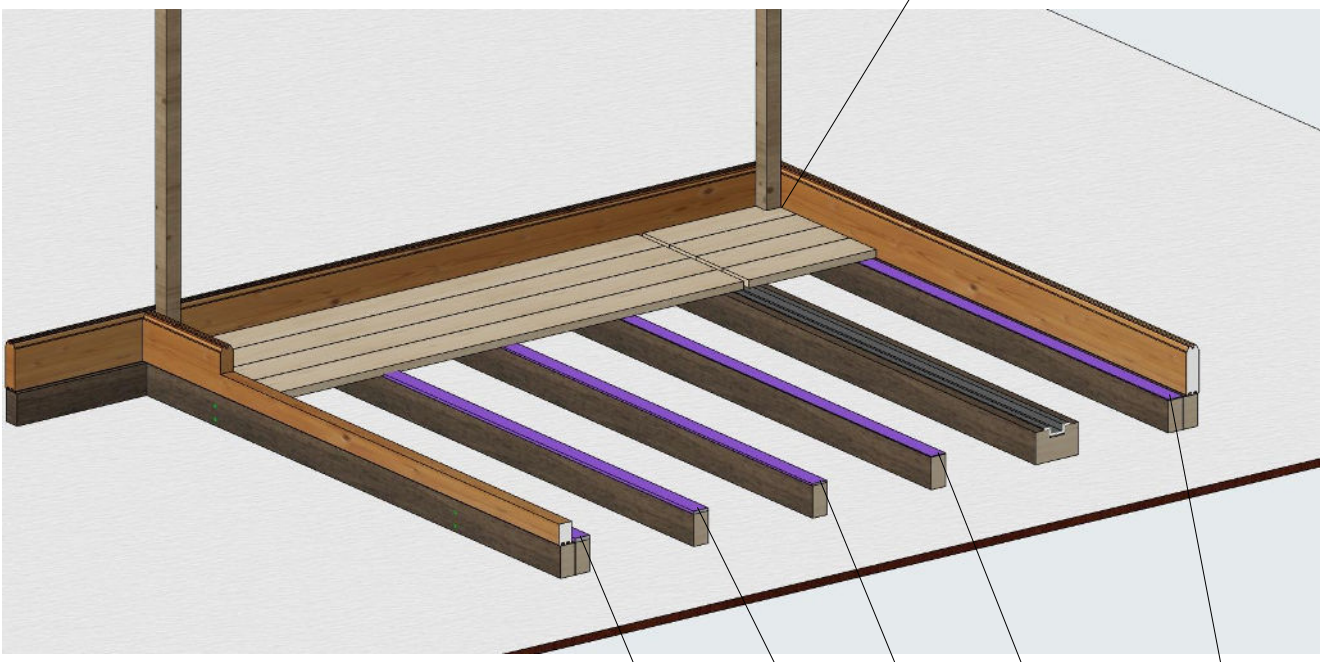

+12mm +9mm +6mm +3mm +3mm

Apply plywood slope details to give floor board incline for water drainage

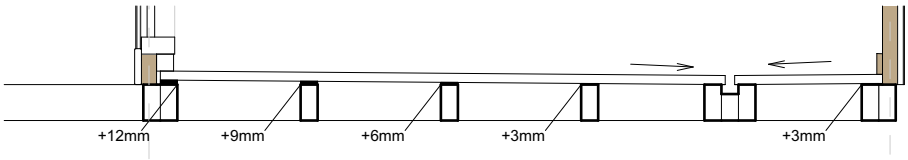

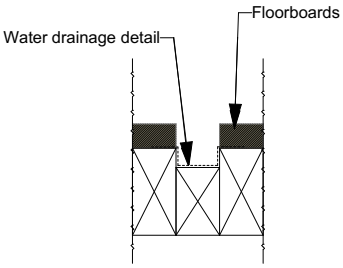

Fix floorboards with 40mm screws as shown :

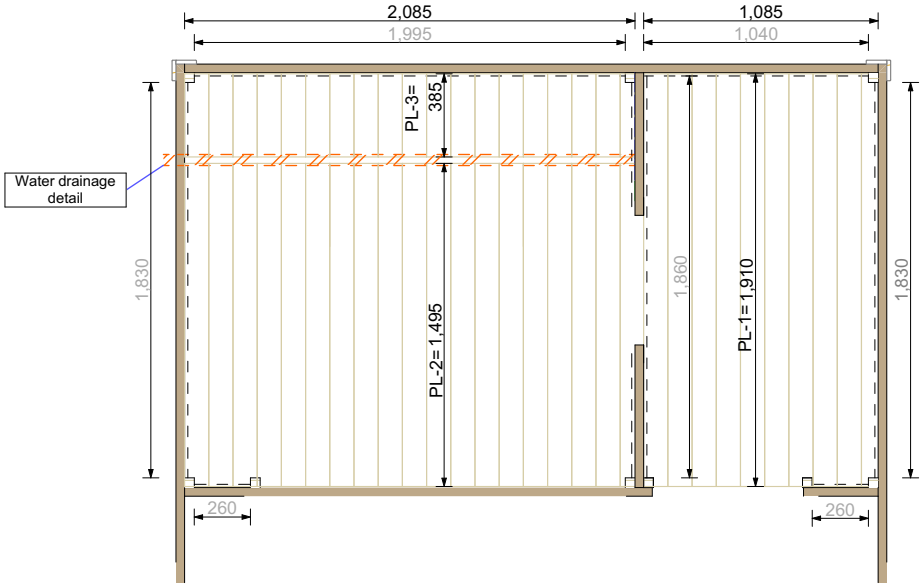

Leave ~3mm gap between floor board and wall

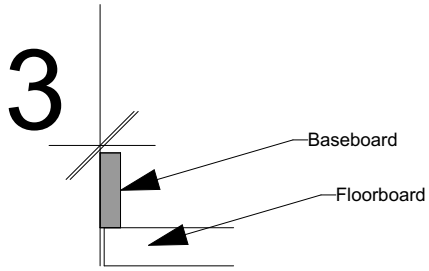

Windows

1. Attach the bottom, top and one side frame 45x45mm to the window leaf with 70mm screws.

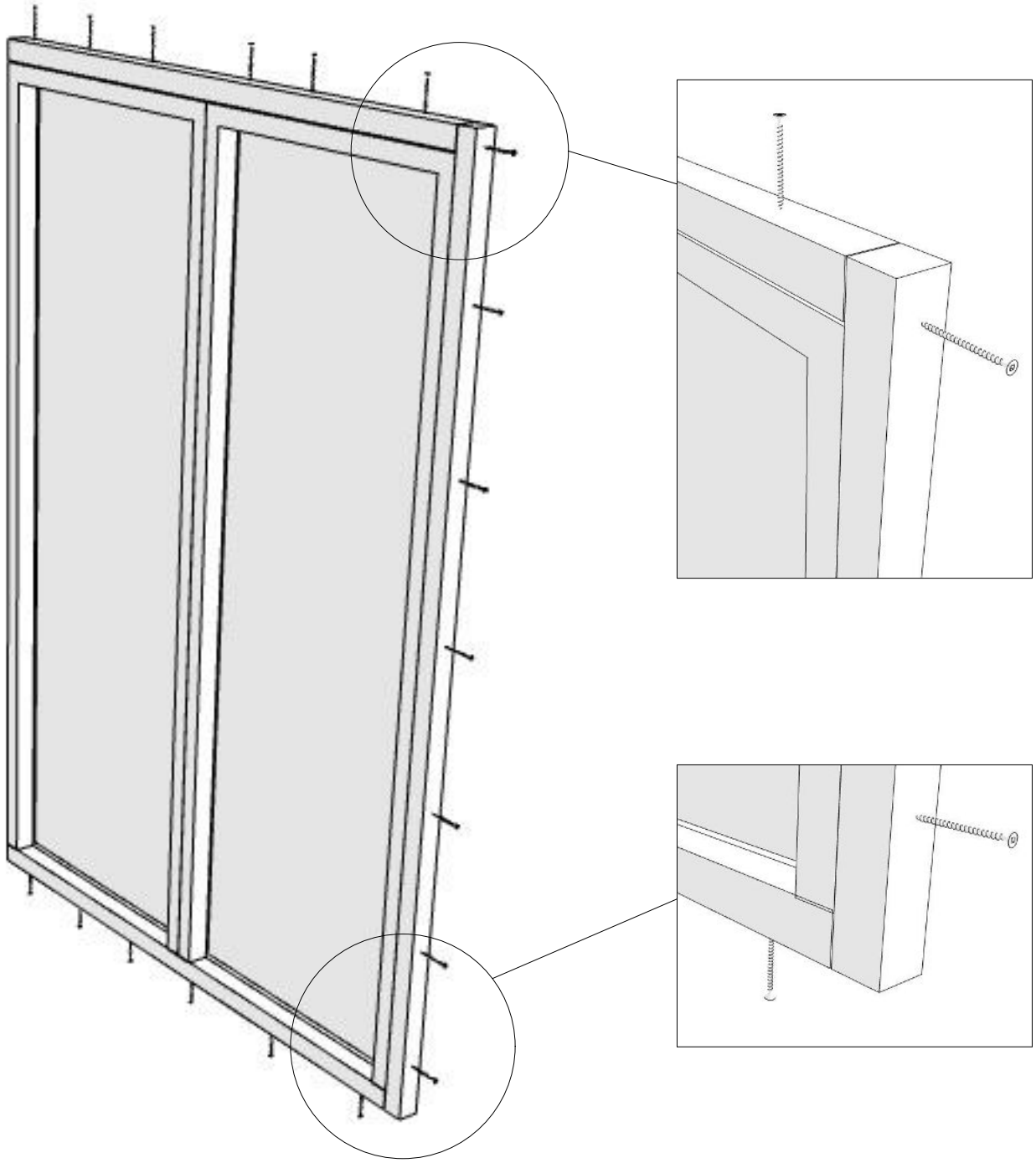

Windows

2. Lift the windows to place

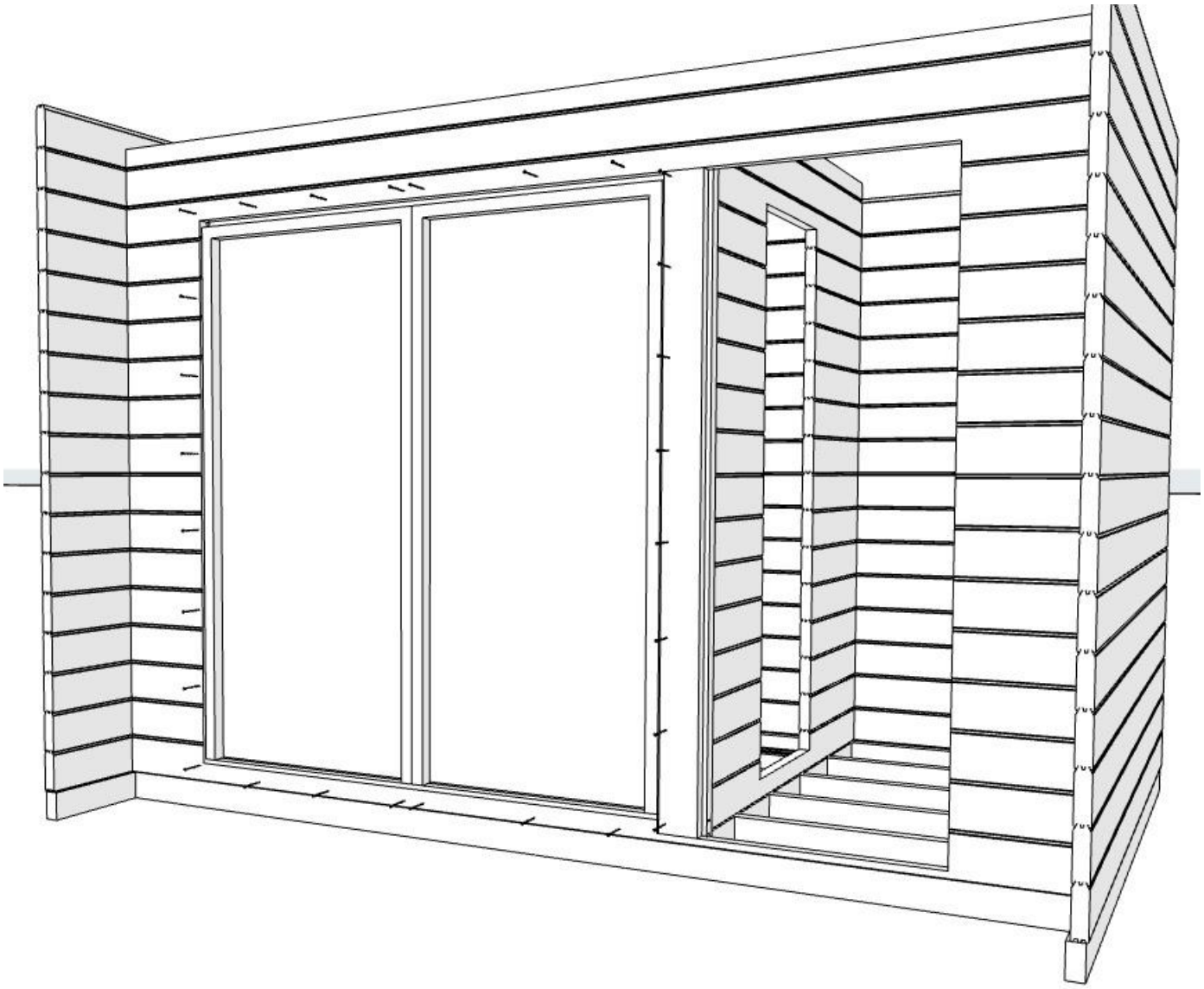

3. Fix the window leaf to the window frame with 70mm screws

Windows

3. Fix the window leaf to the window frame with 70mm screws

TOP VIEW

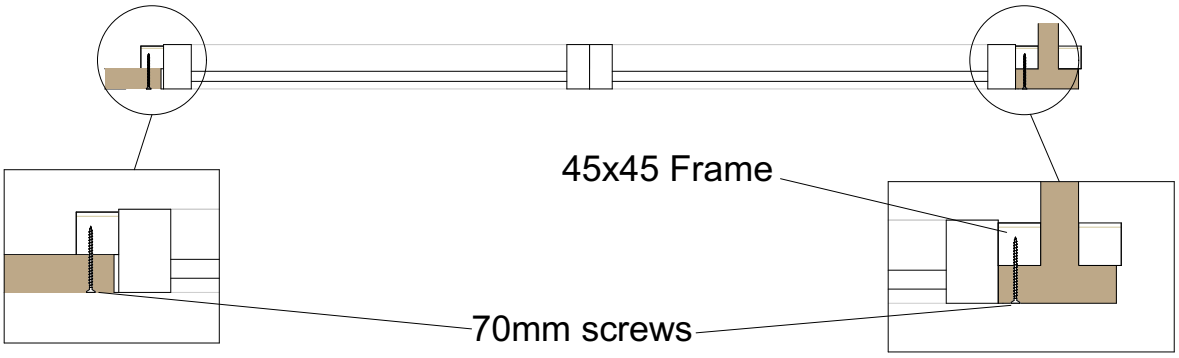

SIDE VIEW

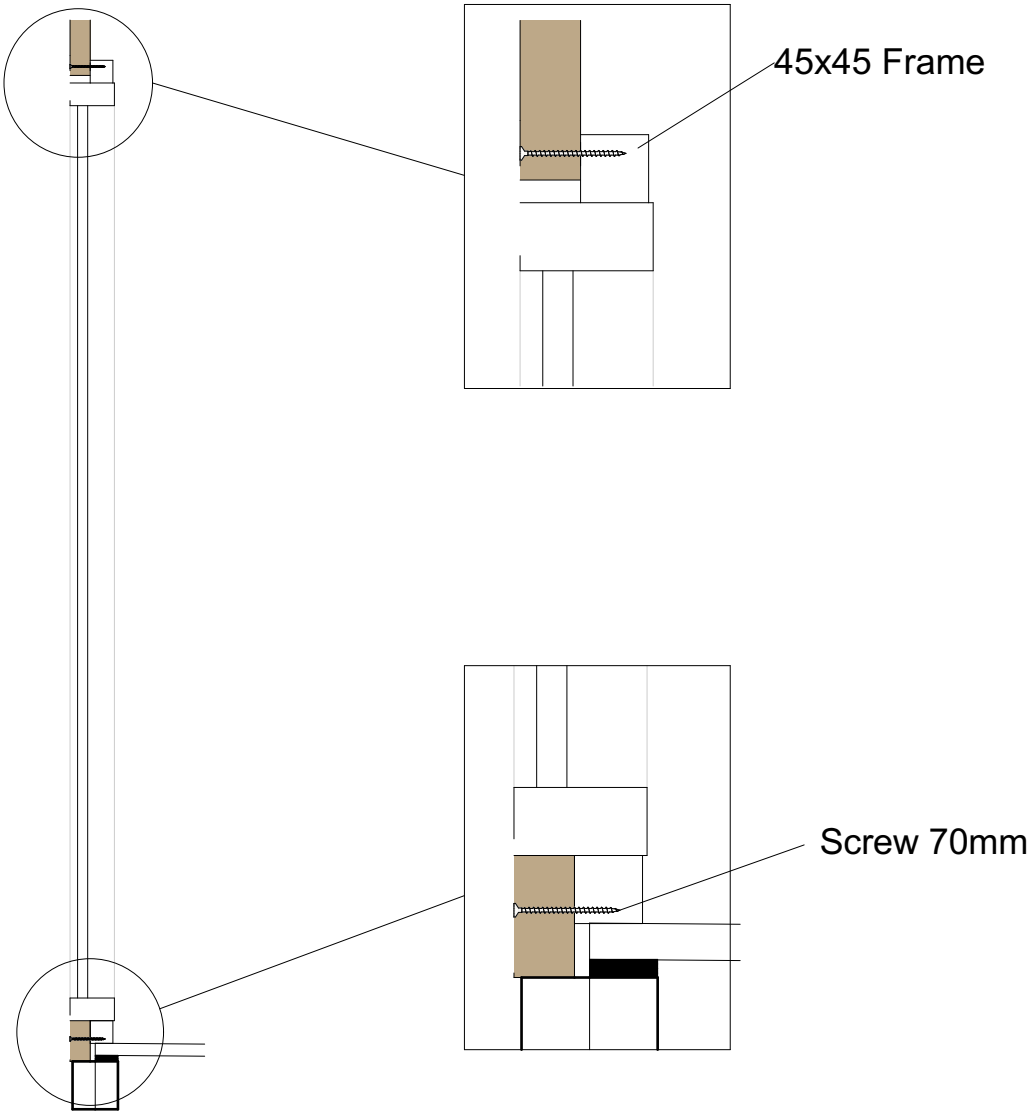

Doors

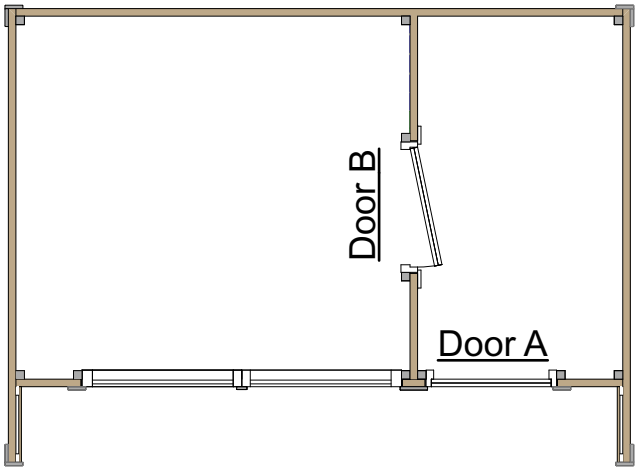

REMOVE GLASS FROM DOOR FRAME WHEN INSTALLING!

Door B already has frame around the door leaf.

1. Lift the door in place sideways

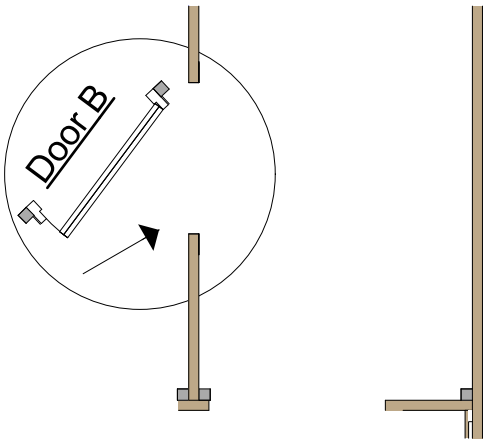

2. Fix the Door leaf to the door frame with 70mm screws

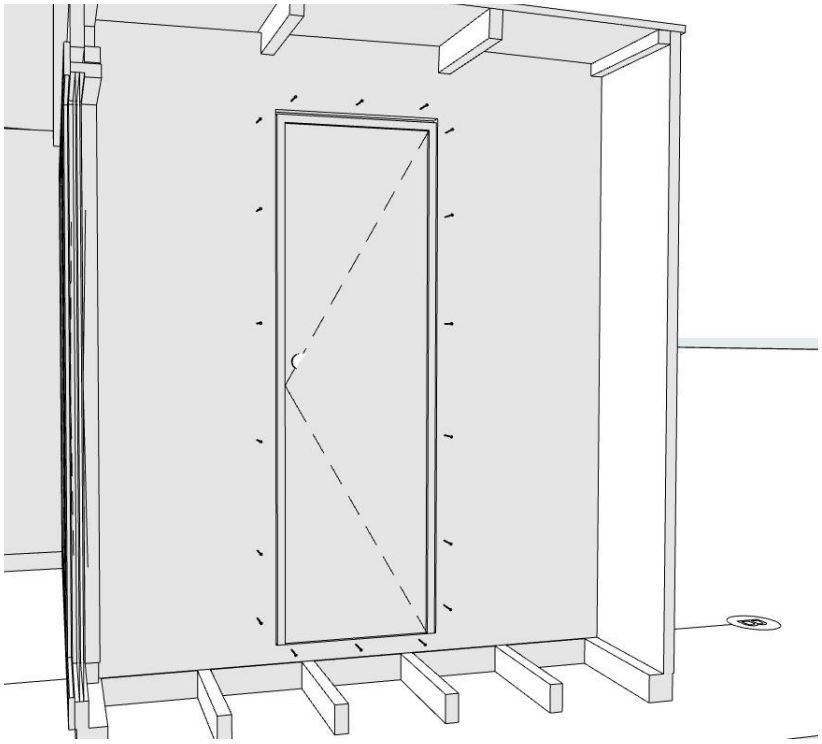

Doors

1. Attach the bottom, top and one side frame 45x45mm to the Door A leaf with 70mm screws.

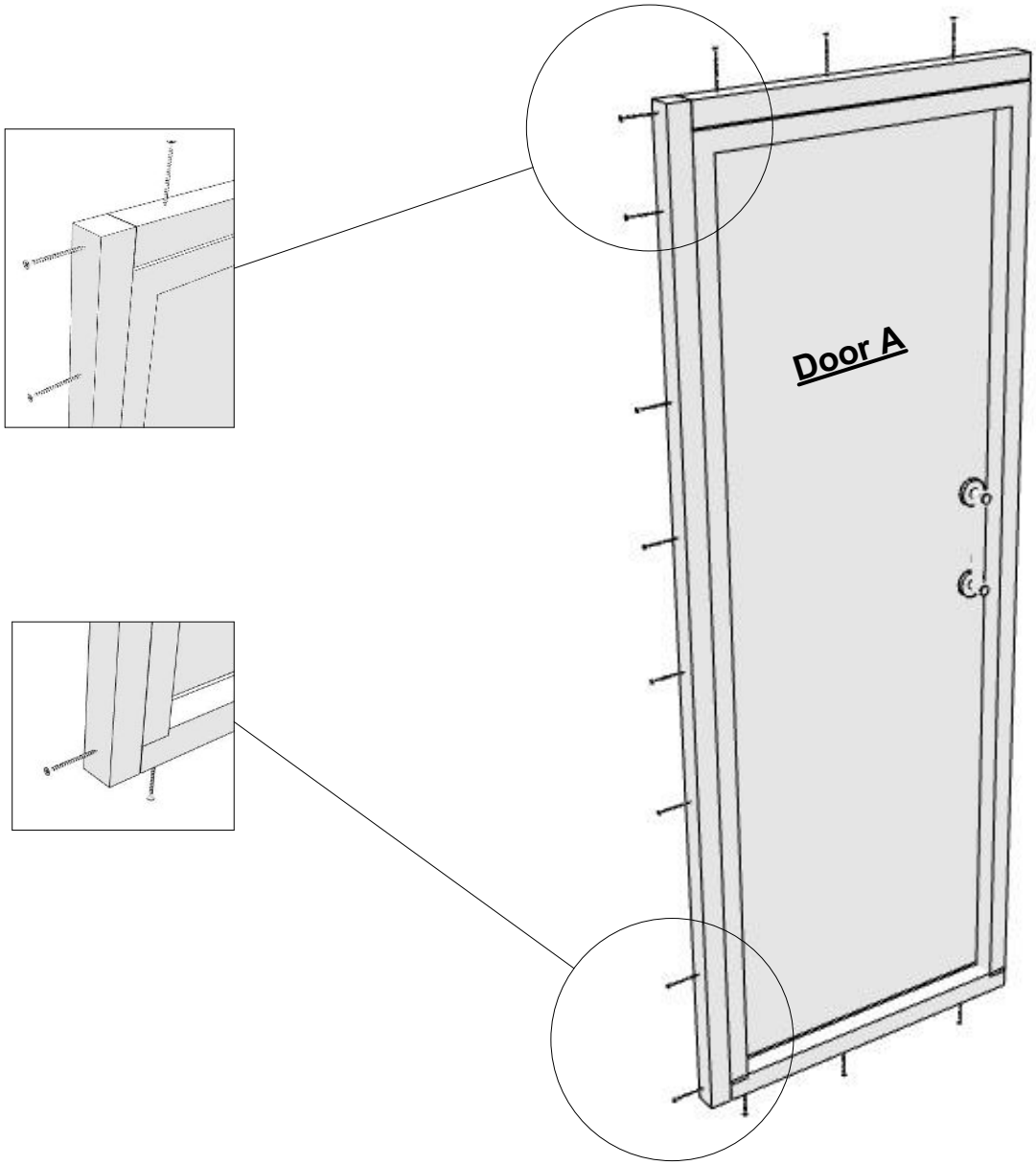

2. Lift the door in place

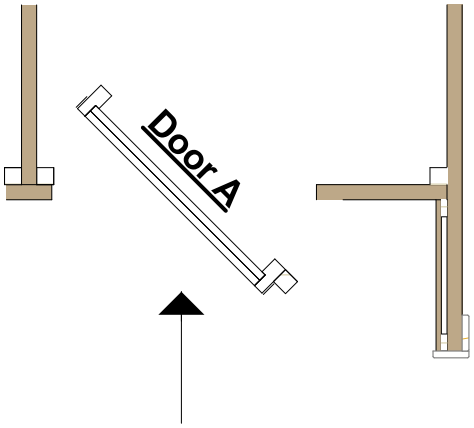

Doors

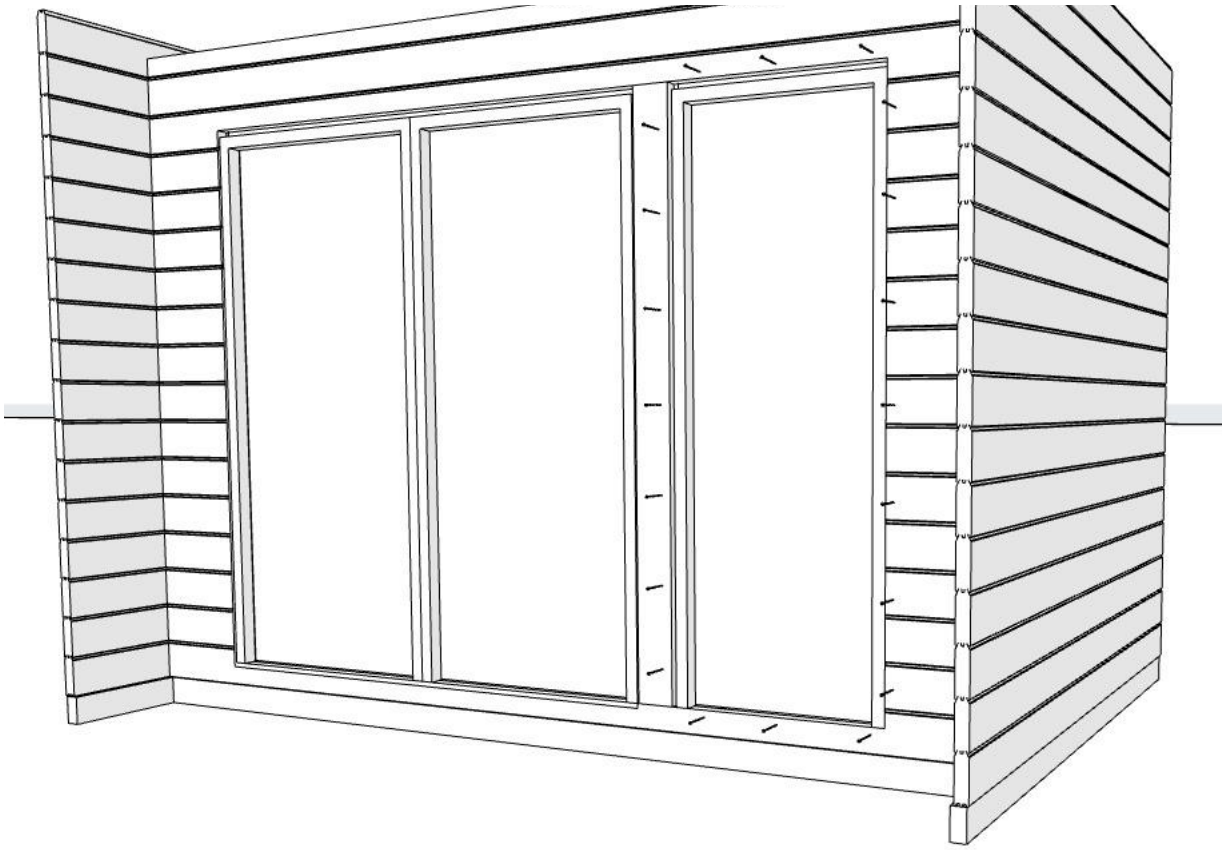

3. Fix the door leaf to the door frame with 70mm screws

TOP VIEW

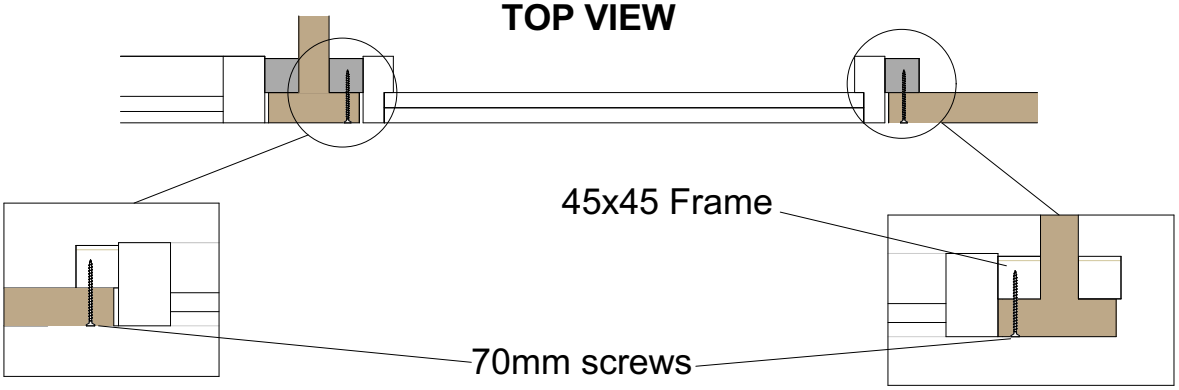

SIDE VIEW

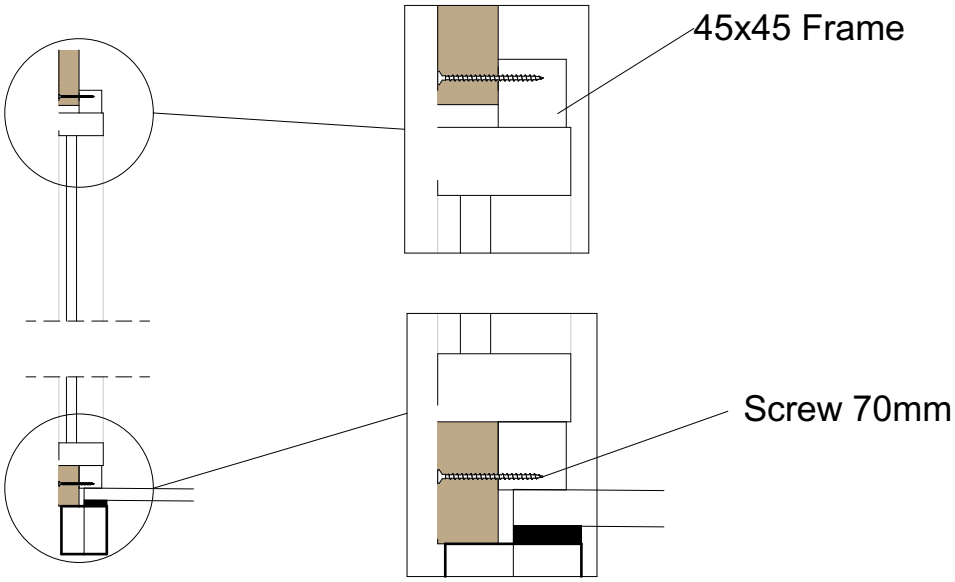

Outer lining boards

Roof lining boards

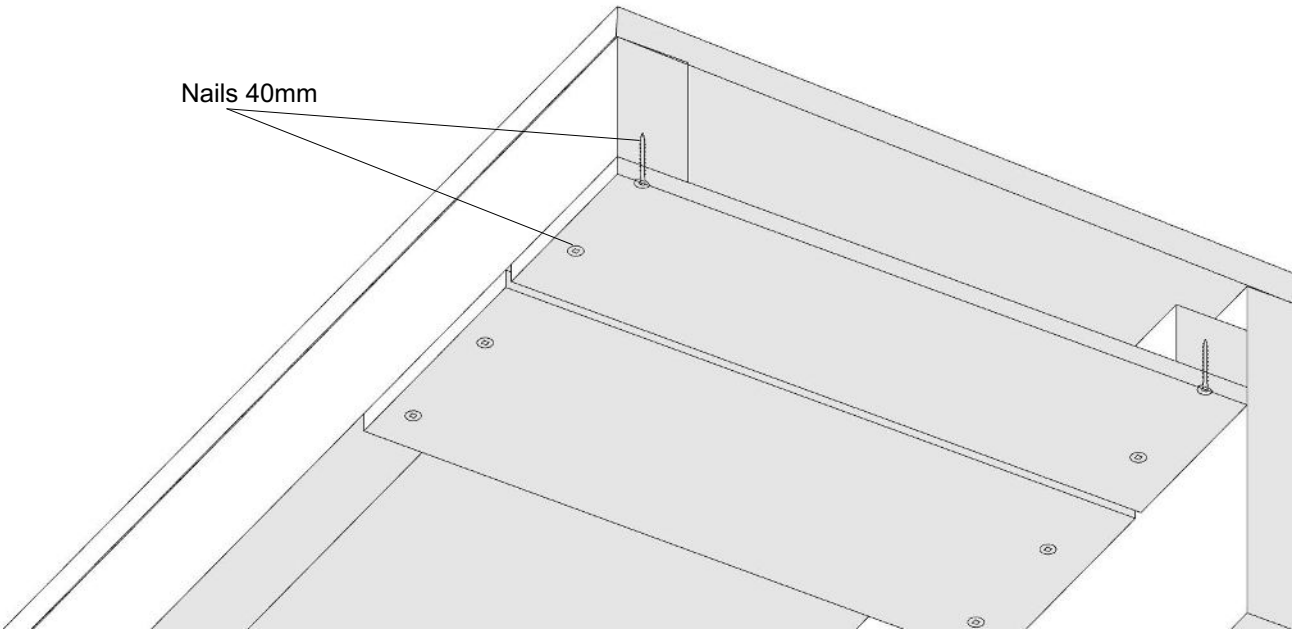

Wall lining boards

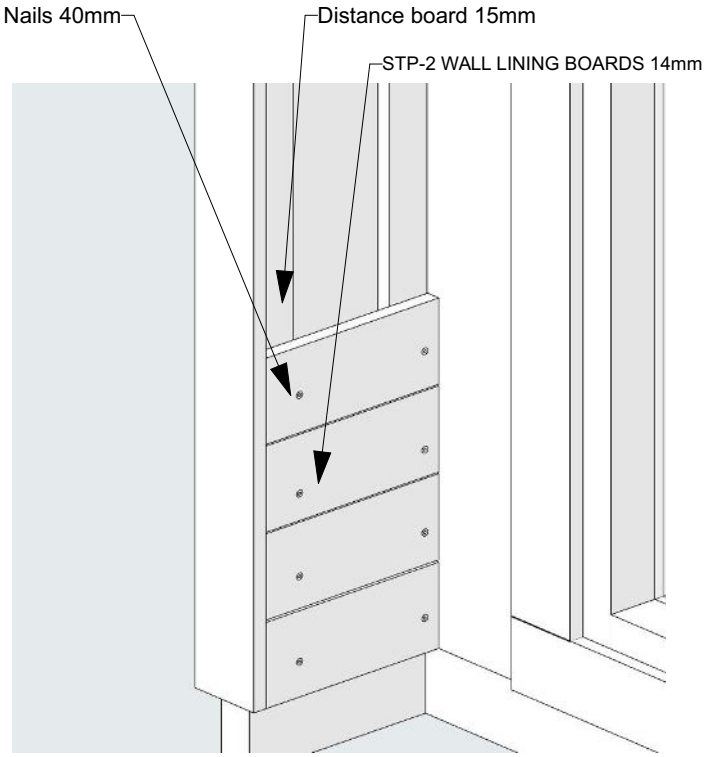

Mouldings

PATIO M

*Corner moulding cutoff

Sauna Benches

INSTALL SAUNA BENCHES AFTER THE DOOR/ WINDOW IS IN PLACE!

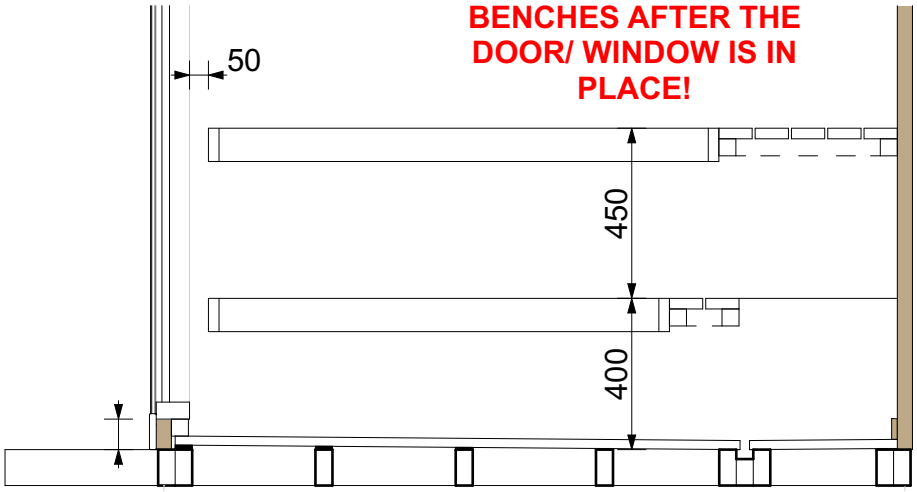

1. First fix the bench supports to the wall
2. Then lift the benches on top of them
3. Fix benches with the 70mm screws to the walls and supports

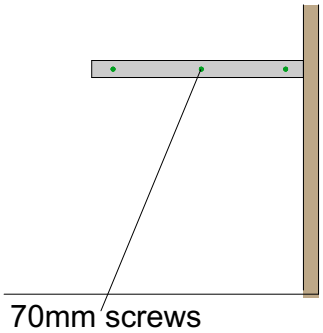

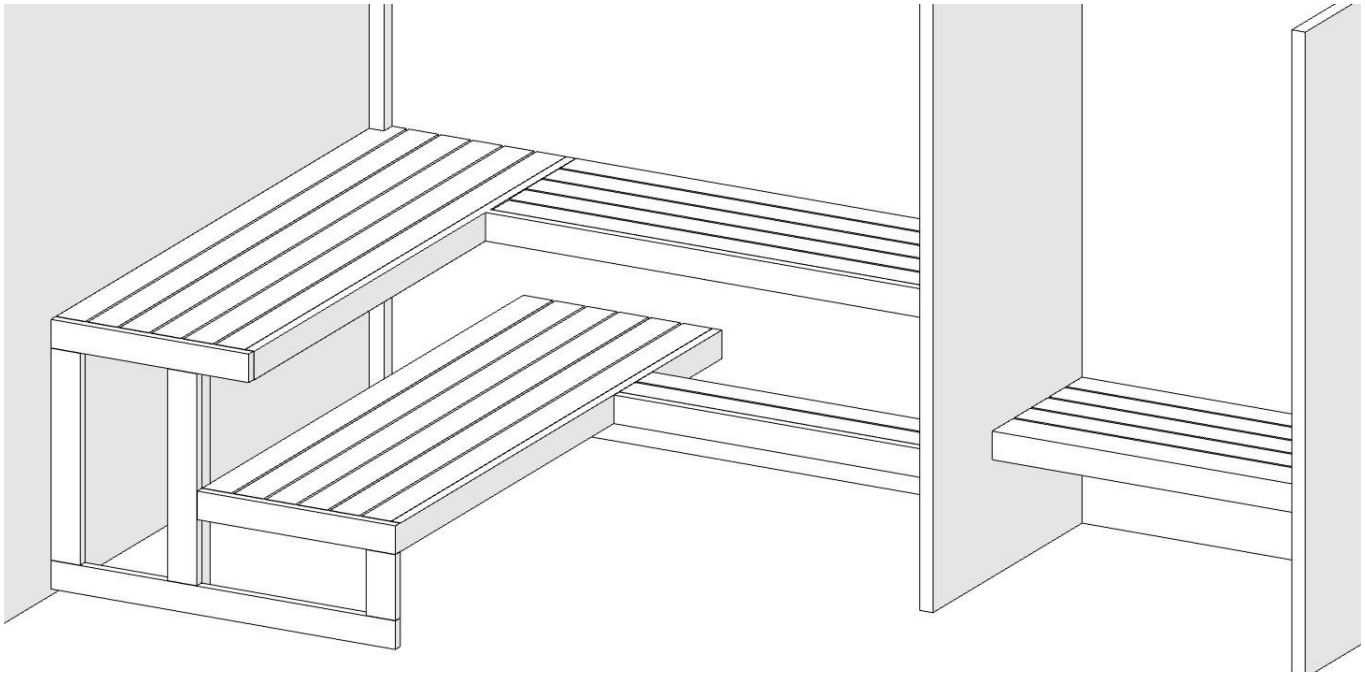

Reccomended to use glue to attach sauna bences to the wall

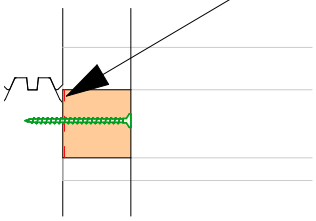

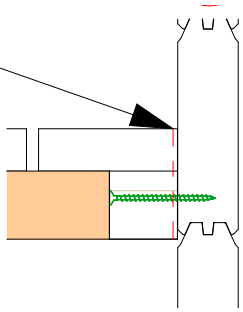

Sauna Benches

PATIO M

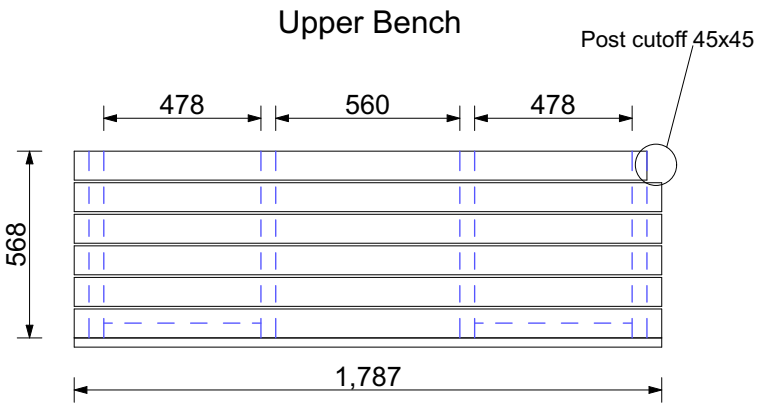

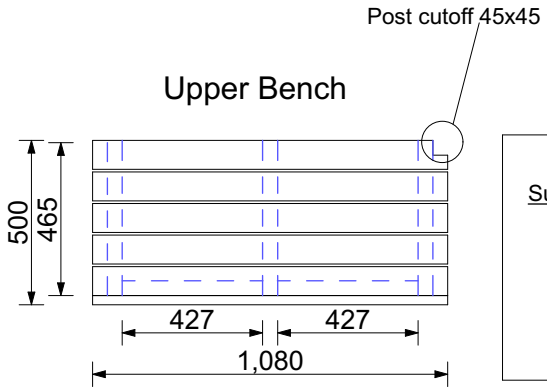

Supports 45x45
560 - 4pcs
515 - 1pcs
465 - 2pcs
420 - 2pcs
180 - 2pcs

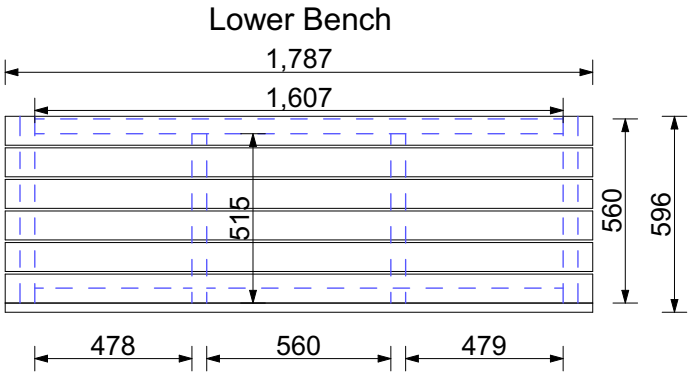

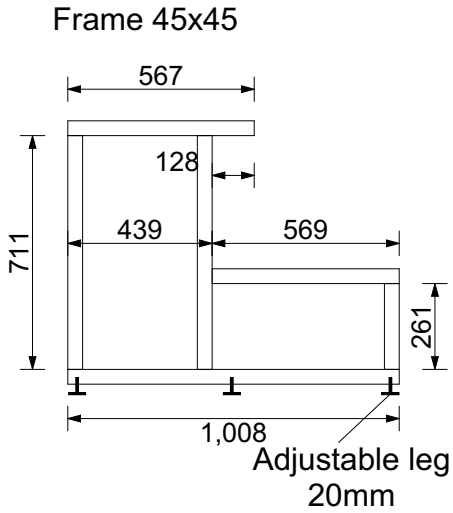

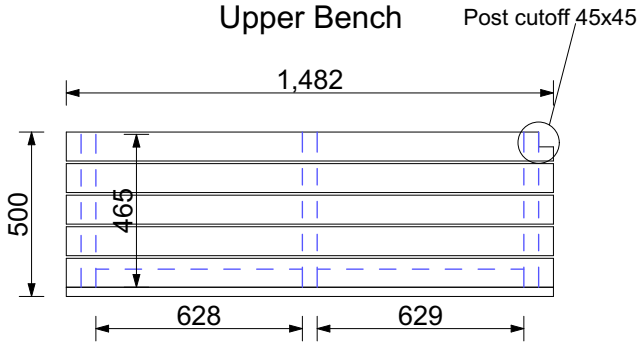

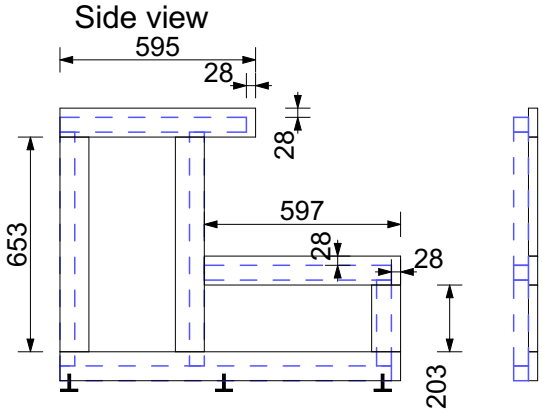

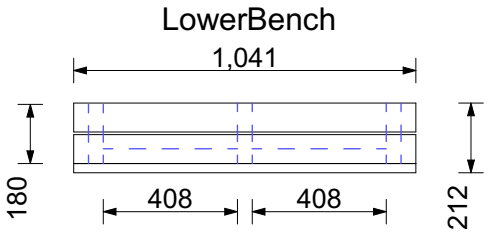

Ventilation Louvre and ventilation grid

=10cm

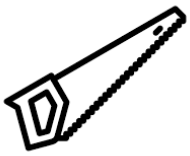

To install ventilation louvre and ventilation grid use saw or diamond drill bit.

Ventilation louvre wood

Ventilation grid

Install hole under sauna ceiling

Install hole under sauna benches

EPDM roof cover

Tools:

SAFETY FIRTS!

IT IS RECOMMENDED TO USE GLOVES, SAFETY GLASSES AND RESPIRATOR WHEN APPLYING THE GLUE. ALSO APPLYING OF THE GLUE SHOULD BE DONE IN WELL VENTILATED AREA OR OUTSIDE!

1. Clean the roof surface from dirt, dust, ice , snow etc...
2. Check for defects before installing the roof cover.
3. Put the rubber roof cover in position and check for correct overhang.
4. Fold or roll the rubber roof cover and start applying the glue.
5. Apply the glue on the roof surface and on the rubber.
6. Wait until the glue is "Touch dry". (Nothing happens when the waiting time is too long)
7. Roll or fold the rubber roof cover in place, avoid air bubbles and wrinkles on the roof surface. Smoothen the roof cover with a broom or brush.
8. When the rubber roof cover is in place, cut the excess rubber.

1.
7.

3.

5.

8.

EPDM roof cover

Back metal profile and rubber roof cover:

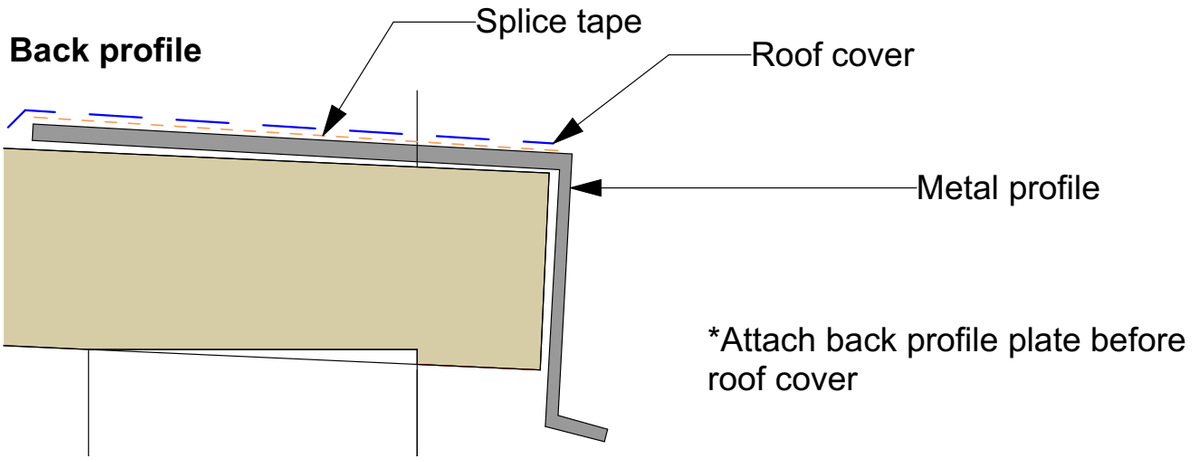

When installing the back profile apply Quicprime plus glue on top of the metal profile. Then apply the splice tape (2 sided) on top of the metal profile.

Use Quickprime plus glue and apply it on the rubber surface and on the metal roofing sheet

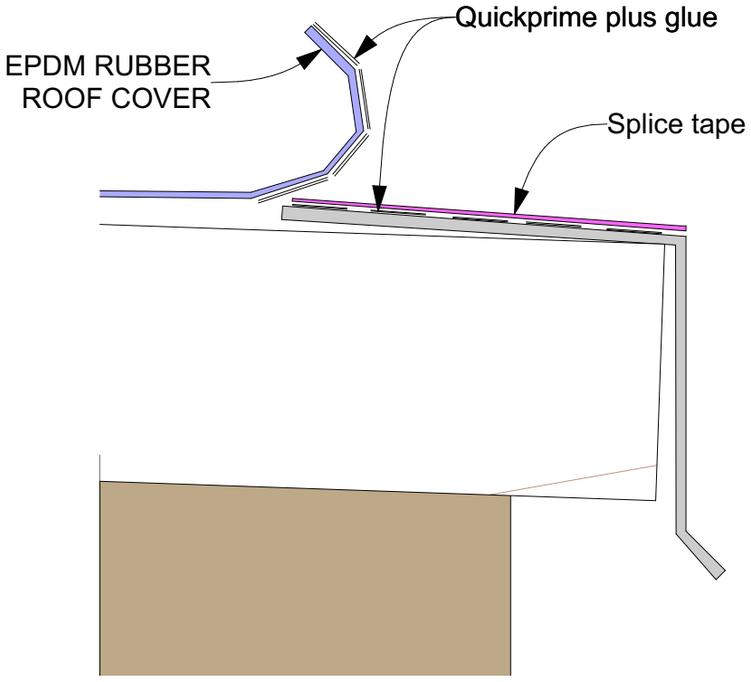

Remove the top side of the splice tape and apply the glued rubber roof cover on top of the tape

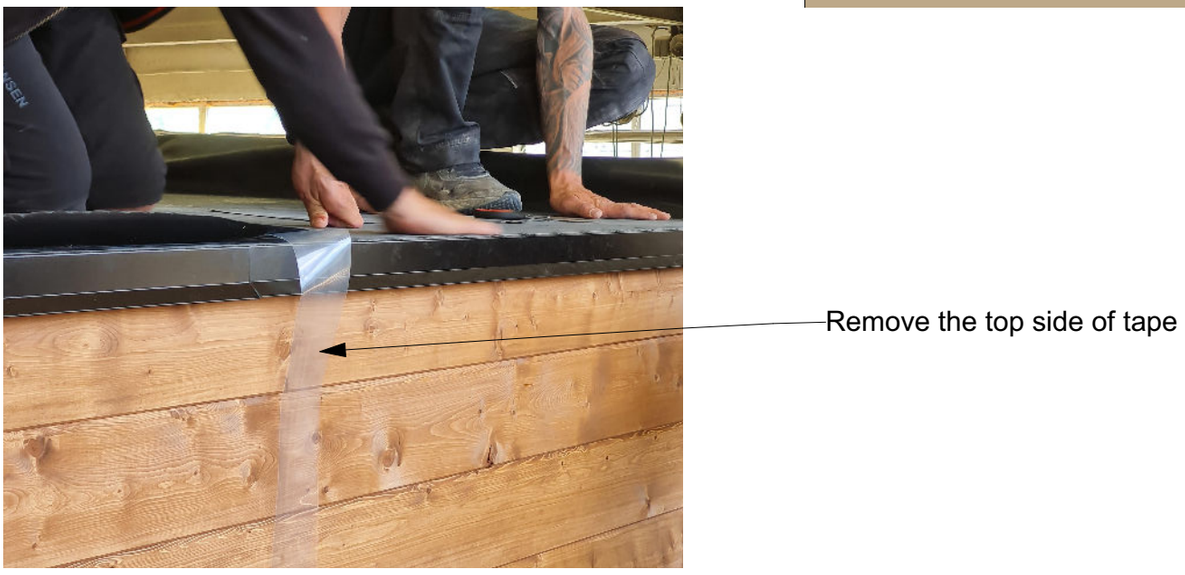

Patio metal roof profiles

Side and front profile

Back profile

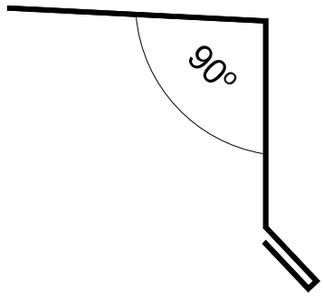

*If there is 2 pieces of back profile, leave about 10-20mm overlap and fix with screws

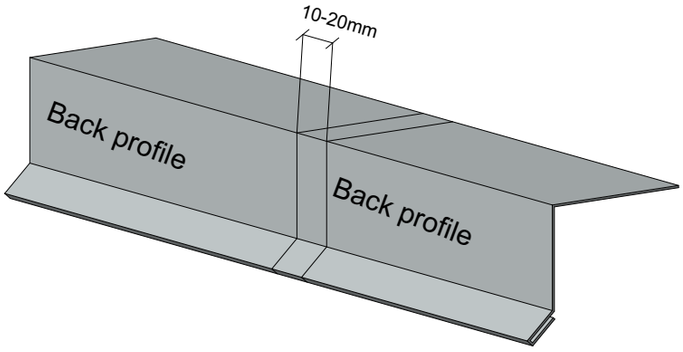

Back corner:

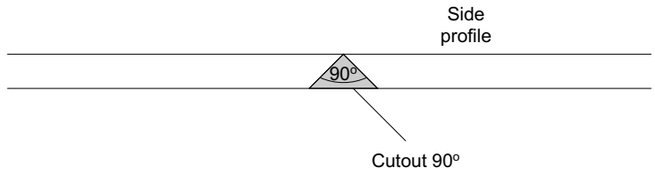

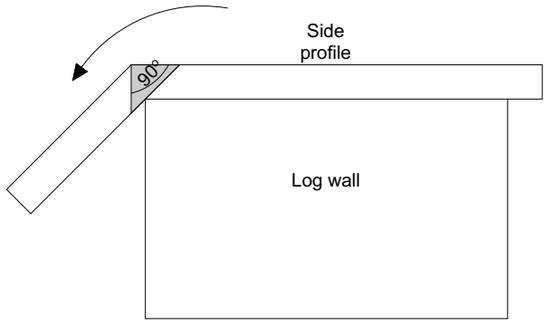
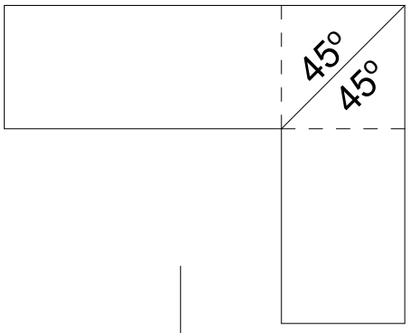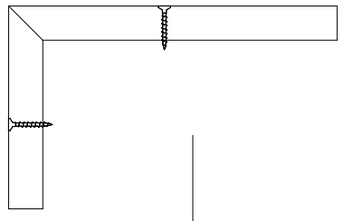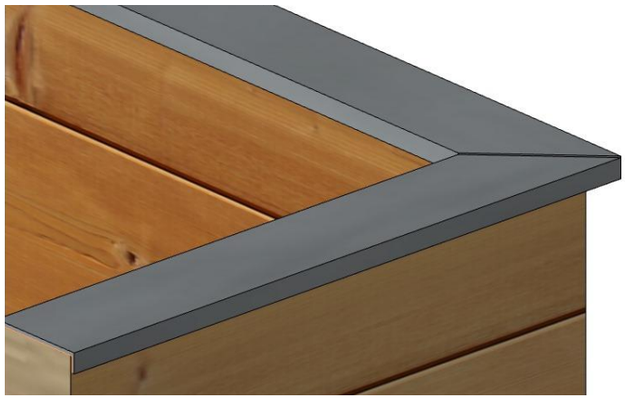
Front corner: