Operation Manual for Grill'D heaters

Congratulations on your choice - the choice of high duty heaters! Compliance with this Manual guarantees excellent quality and maximum service life of the Grill'D brand stone heaters.

Read the heater and water tank Manual carefully before commencing installation and operating the stone heater.

Aurora 160 Window

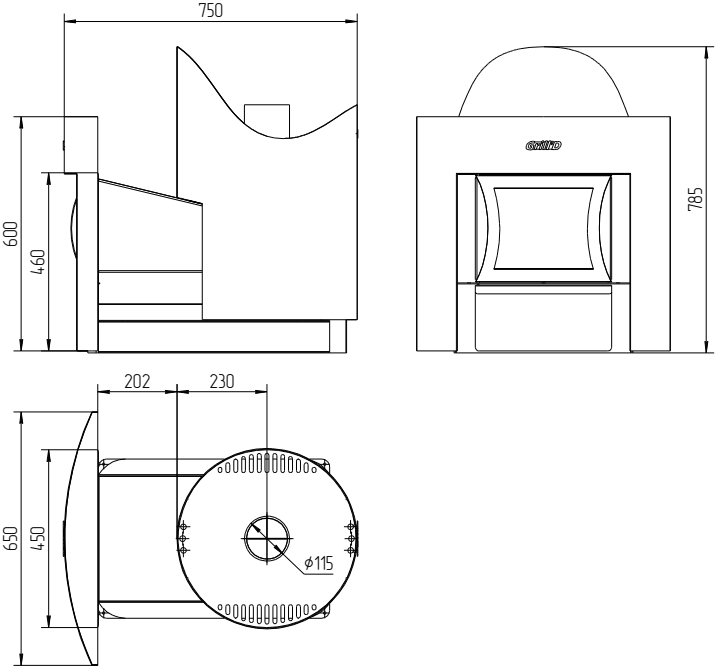

Fig. 1 *Dimensions of heater Grill'D Aurora 160 Window*

CONTENTS

No.	*Name*	*page*
1.	APPLICATION	*3*
2.	TECHNICAL DATA	*3*
3.	HEATER DESIGN	*4*
4.	HEATER OPERATION	*6*
5.	HEATER PARTS INSTALLATION	*7*
6.	WARRANTY	*9*
7.	COMMISSIONING	*9*
8.	HEATER OPERATING PROCEDURE	*11*
9.	SAFETY MEASURES	*12*
10.	TYPICAL FAULTS AND TROUBLESHOOTING METHODS	*13*
11.	MAINTENANCE	*14*
12.	LABELING AND PACKING	*14*
13.	TRANSPORTATION AND STORAGE	*14*
14.	DISPOSAL	*15*
15.	SCOPE OF SUPPLY	*15*

1. НАЗНАЧЕНИЕ

Grill'D brand wood-fired heater is designed to heat a steam room and adjacent premises of a bath house, as well as to generate steam and heat water. The heater allows obtaining various combinations of temperature and air humidity.

IMPORTANT! When exploiting the heater commercially, daily, round-the-clock or in another heavy duty operating mode, the work load increases in 5-10 times. In case of such operating mode, the Manufacturer disclaims any warranty obligations.

IMPORTANT! Carefully select the heater for the volume of the steam room. A heater with a small heating capacity will require a more intensive heating during a longer time, which will shorten its service life.

2. TECHNICAL DATA

Technical data is specified in Table 1. Heater dimensions are specified in Figures 1.
Approved fuel types: hardwood with a moisture content not more than 25%, fuel briquettes without artificial binder resins.

Table 1. ***Technical data***

Model	*Aurora 160 Window*
Steam room volume (m^3)	from 6 to 16
Outlet connection diameter (mm)	115
Mass of stones (max, kg)	58
Stone diameter (mm)	from 70 to 150
Width (mm)	650
Height (mm)	785
Depth (mm)	750
Mass (kg)	61
Maximum firewood length (mm)	390
Minimum chimney height (mm)	5

3. HEATER DESIGN

IMPORTANT! Overall views of the heaters and (or) of their elements may be slightly different from the ones shown in the figures.

Overall view and location of the heater main elements are shown in Figure 2. Heater firebox (6) is fabricated of high duty rolled steel. Use of such steel increases the heater's durability and service life taking into account the firebox wall thickness of 3 mm, while the most critical elements are made of 5 mm thick steel.
The effective design for heating up the stones and the steam room is due to the arrangement of heat exchange process not only via the surface of the stone heater bottom and the connection pipe (2), but also by means of air convection between the heater firebox and protective shield (1) through convection holes (Figure 3).
Also, the protective shield screens high-level infrared radiation coming from the firebox walls as the heater is getting hot. Regardless its compact size, the stone heater has room for enough stones to obtain comfortable conditions in the steam room (see Table 1).
Chimney connection pipe is a fixed element with a wall thickness of 5 mm.
It serves as a mandatory transition element from the heater to the chimney.
Heater are equipped with a heating flue (3) allowing the heater to be stoked from the adjacent room, while the decorative screen (7) provides an aesthetic appearance when arranging a wall passage and installing fire blocks.

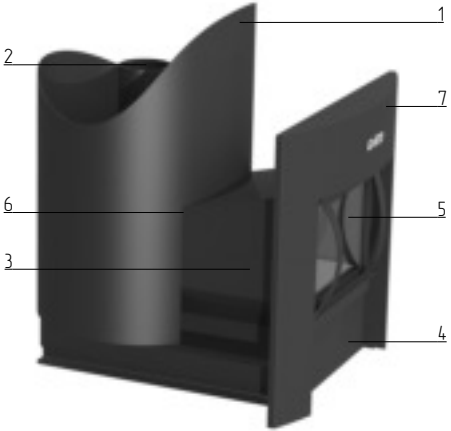

Fig. 2
Heater main elements

1 – protective shield
2 – Chimney connection pipe
3 – Heating flue
4 – Ash drawer
5 – Thermal glass door
6 – Heater firebox
7 – Decorative screen

All heaters can be optionally equipped with special reinforcing devices (Figure 8) that enhance combustion
and additionally protect the heater firebox from destruction due to exposure to high temperature. The devices have ducts for supplying additional combustion air, and when it enters the firebox, the air passes partially above the fire into its upper part, where post-combustion of flue gases occurs. Additional heat is generated during this process, thus enhancing the heater's efficiency.
There is a grate at the bottom of the heater (refer to Figure 5), it is fabricated of high duty rolled steel with a thickness of 5 mm. The grate is one of the most thermally loaded parts of the heater, and the metal used for its fabrication meets all the specified requirements.
Grill'D heater firebox door (5) is fabricated of steel and Schott Robax® thermal glass (Germany).
An ash box with an ash drawer (4) is located under the firebox. The outer surface of the heater is covered with anti-corrosion heat-resistant enamel.

IMPORTANT! The Manufacturer reserves the right to make modifications to the design of the heater that do not impair its consumer properties.

4. HEATER OPERATION

It is necessary to operate the Grill'D heater in active combustion mode to set the temperature and during firing up. The principle heater operating time shall be in conservative mode.
The door opening angle is sufficient for convenient loading of fuel and allows visual monitoring of the burning process due to the availability of the thermal glass.
Ash falls through the plates of the grate into the ash drawer, which allows convenient cleaning of the heater without interruption of burning.
Stones in the stone heater are high-capacity heat accumulators, they shield the user from high-level infrared radiation and serve to generate steam when water is poured onto them.

Fig. 3 *Heater design and operation*

Fig. 4

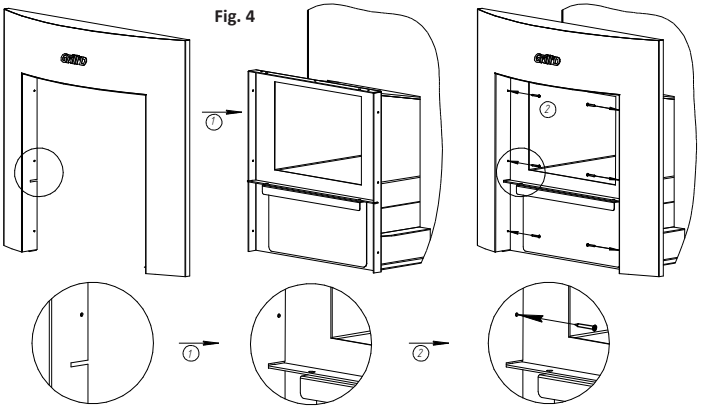

5. HEATER PARTS INSTALLATION

5.1. Decorative screen

IMPORTANT! Install the screen after installation of the heater on the place of permanent operation and installation of fire blocks.

The following is necessary for the installation (refer to Figure 4):

1) Match the locating holes on the screen and on the heating flue frame;

2) Fix the screen with self-tapping screws (included).

5.2. Composite grate

The grate consists of 6 separate plates fabricated of high duty rolled steel with a thickness of 5 mm. A separate seat is provided for each plate (Figure 5).

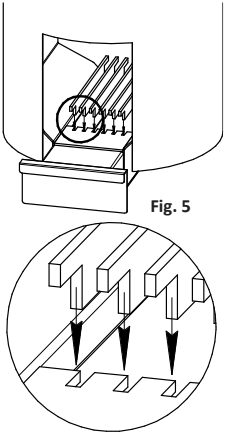

Fig. 5

5.3. Door

IMPORTANT! Install the door after installing the decorative screen.

It is necessary to perform the following actions to install the door (refer to Figure 6):

1) Choose the door opening direction (from left to right or from right to left), and depending on this insert the upper part of the metal pin into the upper mounting hole of the door.

Note: *Insert the pin at an angle (item 1 in Figure 6).*

2) Slide the pin up to let install the bottom of pin into the lower mounting hole of the door;

Fig. 6

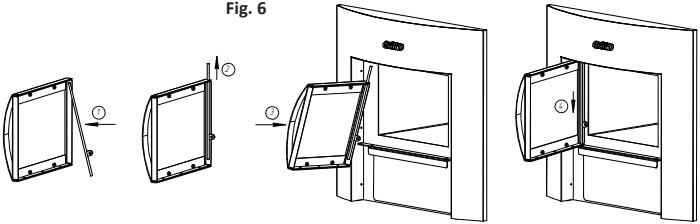

3) Insert the top of pin into the upper mounting hole of the heating flue.

Note: *Mount the door with the pin to the seat at an angle. (Item 3 in Figure 6).*

4) Slide the door bottom to the place of installation and insert the pin into the mounting holes of the door and the heating flue by sliding it home.

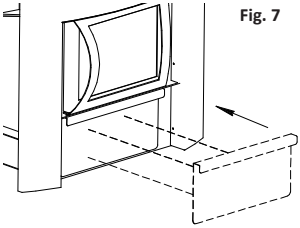

Fig. 7

5.4. Ash drawer

Place of installation and installation method for the ash drawer are shown in Figure 7.

5.5. Combustion chamber reinforcement

It is necessary to perform the following actions to install reinforcement plates (refer to Figure 8):

1) Install the back plate with a convex part to the wall of the firebox. The upper part of the plate shall rest on the firebox wall, while the lower part shall be spaced 5-10 mm from it;

2) Install side plates one by one (the order of installation is of no importance).

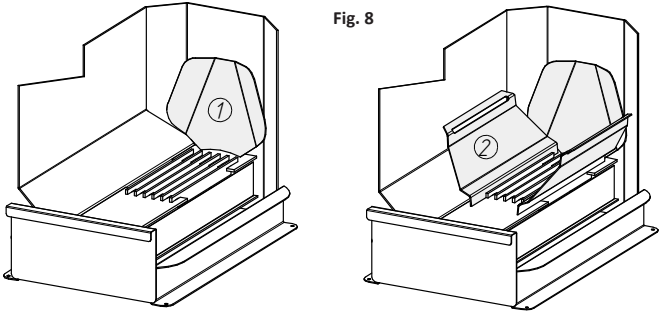

Fig. 8

6. WARRANTY

The warranty period for the Product is 5 years, it applies to the integrity of weld joints. The warranty period for the entire Product is 1 year. The warranty is valid from the date of purchase of the Product by the Consumer. The Product service life is not less than 10 years*. If the Consumer detects a non-compliance of the Product with the specified properties, the Consumer has the right to address a claim to the Company that sold the Product. However, the Company has the right to contact the Manufacturer to resolve issues regarding the Claim.
The Manufacturer undertakes to improve the entire Product or its part (as decided by the Manufacturer) free of charge, replace the entire Product, its components, parts, compensate for the damage in any other way (as agreed with the Consumer), if the defect occurred during the warranty period or due to the Manufacturer's fault.
Should the Consumer make alterations to the entire Product, its component(s), part, then warranty obligations do not apply to the Product. Thereafter, the warranty does not apply to elements that are subject to periodic replacement during operation. The Product warranty is not provided in case of violation by the Consumer of the requirements specified in the Operation Manual, technical requirements for installation and operation of the Product. The above violations by the Consumer release the Manufacturer from responsibility.
Signs of corrosion may appear on the Product due to damage of the paint coating during operation, which is not a warranty case.

** The indicated heater service life is estimated, it is subject to the requirements of this Manual, in case the heater is stoked periodically (not more than 4 hours per week), and is subject to the heater operation using the combustion chamber reinforcement.*

7. COMMISSIONING

IMPORTANT! Remove all packing elements, paper information labels, etc., prior to operation of the Grill'D heater.

IMPORTANT! Prior to operation of the Grill'D heater, it is necessary to carry out a preparatory stoking.

It is necessary to remove the integrated water tank prior to preparatory stoking.

The preferable option for stoking is outdoors, away from combustible surfaces and materials, in compliance with fire safety measures and safe work practices. It is necessary to add on a portion of chimney stacks (2 meters) and load 3-4 logs into the heater firebox, start up a fire.
Meanwhile, partly open the ash drawer (50 mm max), and upon development of a stable draft partly close it leaving a gap (10 mm max). Add firewood into the firebox as it is consumed. Carry out stoking until smoke and odor disappear.

Compound for metal protection and volatile components of the heat-resistant enamel evaporate as a result of stoking.

Note: *Heat-resistant enamel can change tone on the most thermally loaded elements of the heater, which is not a manufacturing defect.*

IMPORTANT! Avoid the chance of mechanical impact and ingress of water on the paint coating of the heater during preparatory stoking.

IMPORTANT! Carry out the heater installation and laying of the stones only after the complete cooldown of the heater.

IMPORTANT! Installation of the heater, chimney, and water tank shall be carried out in accordance with SNiP 41-01-2003 (Construction Standards and Regulations) and by competent employees of a specialized construction and installation company only.

Procedure for the heater and chimney installation:

1) Prepare the room and the place of the heater permanent operation taking into account the requirements of SNiP 41-01-2003.

2) Install the heater on the specified place in compliance with the requirements of SNiP 41-01-2003.

3) Perform the installation of the heater parts in accordance with Section 5 of this Manual.

4) Put the stones into the stone heater.

Note: *While laying the stones, It is necessary to ensure that they are as large as possible and that they fit closely to the entire surface of the stone heater. It is safer and more appropriate to use special stones, such as talcum peach, gabbro diabase, jade and others, intended for use in a bath house.*

IMPORTANT! It is prohibited to use halite to fill stone heaters.

5) Install the chimney.

6) Make sure that all heater elements and chimney system modules function normally (without firing the heater), and also make sure that the following faults and discrepancies are absent:
- Missing parts;
- Visible damage of the heater body, parts;
- Ash drawer moves with difficulty.

IMPORTANT! It is prohibited to operate faulty heaters and chimneys.

IMPORTANT! The heater connection with the chimney or other structures shall be dismountable.

IMPORTANT! For a better sealing of chimney modules with one another, it is compulsory to use a high-temperature sealant with an operating temperature of at least 1000 ^{o}C.

8. HEATER OPERATING PROCEDURE

1) Prior to every firing of the heater proceed as follows:

- Make sure that there is draft in the chimney.
- Make sure that there are no foreign objects, combustion Product residue from previous stoking in the heater firebox, ash drawer, or in the chimney.
- As required, remove all unnecessary and foreign objects from the firebox and chimney; remove ash from the ash box.
- Fill the integrated tank up with water.

IMPORTANT! The use of cleaning logs (briquettes), homemade compounds creating high temperature in the heater firebox and chimney, is prohibited for the purposes of burning the soot deposited in them.

2) Put 3-4 logs on the grate in such a way as to ensure free access of air to the combustion area (lay the firewood loosely, adjust the ash drawer gap to be 50 mm max).

IMPORTANT! Allowing firewood to burn inside the heating flue is prohibited. Allowable length of logs is specified in Table 1.

IMPORTANT! It is allowed to use only the fuel types specified in Section 2. Coniferous, resinous tree species (spruce, fir, pine, etc.) are not recommended as fuel. Construction and other materials containing chemicals, glue, etc., are strongly prohibited as fuel. wood chipboard, wood fiber board, and others.

IMPORTANT! Burning firewood with a moisture content of more than 25% in the heater leads to a rapid formation of soot deposits on the walls and flue of the firebox, as well as on the chimney walls.

3) Ignite the firewood loaded into the firebox.

IMPORTANT! Lighter liquids, explosive or toxic substances, paints, solvents, gasoline, etc., are prohibited to be used for this purpose.

4) After heating up of the chimney and development of stable draft (usually after burning of the first load of firewood) the heater can be switched to conservative burning in order to maintain the temperature (partly close the ash drawer, leaving a gap of 10 mm max). Burning mode can be controlled via adjusting the position of the ash drawer (opening/closing), if necessary.

IMPORTANT! After the firing of the heater and prior to development of a stable draft, emissions of minor volumes of smoke are possible.

5) When further stoking and loading of firewood is required, close the ash drawer, and 5 minutes after that open the door smoothly, without jerks. Load the firewood and close the door.

IMPORTANT! In order to avoid early burnout of the firebox walls, It is allowable to carry out subsequent (upon the development of a stable draft) stoking of the heater to maintain temperature in the steam room in conservative mode only. It will also help to save the fuel.

6) The heater operation may be terminated after the entire load of firewood burns up. To do so, wait for the complete cooldown of the heater, remove ash from the firebox to the ash drawer, and then clean the ash box.

7) Drain the water from the integrated tank.

IMPORTANT! It is prohibited to use salt solution to generate steam during operation: pouring it onto the stone heater and the heater metal.

IMPORTANT! It is necessary to avoid ingress of water or salt solution onto the exposed metal parts of the heater that are both in the heated and unheated condition.

IMPORTANT! Partial burning out of heat-resistant enamel is possible on the most thermally loaded elements of the heater during operation, which is not a manufacturing defect.

IMPORTANT! The firebox metal may become slightly deformed during operation, which is not a manufacturing defect provided the integrity of weld joints is preserved.

IMPORTANT! In case there is a hot water tank, the water shall be drained from the tank every time after termination of the heater operation, if the temperature in the room drops below + 5 ^{o}C during interruptions of the heater operation.

9. SAFETY MEASURES

IMPORTANT! It is prohibited to touch hot surfaces of the heater, stones, and chimney.

IMPORTANT! It is prohibited to dry clothes, items, objects, firewood, bath brooms, etc., on the heater surface.

IMPORTANT! Combustible objects shall be spaced from the heater surface not less than 500 mm.

IMPORTANT! It is prohibited to operate the heater with the door unclosed.

IMPORTANT! Do not stand too close to the heater when pour water onto heated stones.

IMPORTANT! For safety reasons use gloves or special tools for opening the door.

IMPORTANT! The heater shall be under supervision during the entire stoking time. Do not entrust this responsible work to children.

10. TYPICAL FAULTS AND TROUBLESHOOTING METHODS

1) Fault: Appearance of burning odor and (or) chemical odor.
Possible cause: There is leftover industrial oil on the heater surface, and (or) the odor comes from heat-resistant enamel.
Troubleshooting: Stoke the heater in accordance with Section 7

2) Fault: It takes a long time to heat the room.
Possible cause: The heater was selected incorrectly and (or) thermal insulation of the room is not in compliance with the requirements.
Troubleshooting: Select a heater of a greater capacity. Insulate the room in accordance with SNiP 23-02-2003.

3) Fault: Burnout of the firebox walls and (or) of the grate plates.
Possible cause: Unrecommended fuel was used, and (or) the heater was operated in the intensive combustion mode after firing and development of a stable draft.
Troubleshooting: Repair the heater or replace it with a new one.

4) Fault: Smoke penetrates the room through the heater door under wind conditions.
Possible cause: Poor draft in the chimney, and (or) chimney channels are placed in a wind pressurization area.
Troubleshooting: Extend the chimney stack height to ensure that its outlet is routed out of the wind pressurization area.

5) Fault: Gradual reduction of draft. Low combustion of the fuel, smoke enters the room with the heater door open.
Possible cause: Blockage in the chimney or flue channels of the heater.
Troubleshooting: Carry out a complete cleanup of the heater and chimney from; remove foreign objects from the flue channels.

6) Fault: Full absence of draft during firing of the heater.
Possible cause: There is cold air in the chimney.
Troubleshooting: Burn some paper, chip scrap, etc., over the damper or at the place provided for cleanout in accordance with the “Rules for Arrangement of Stoves and Chimneys”.

7) Fault: Water is running down the chimney, the pipe gets wet. Part of the moisture shows on the outer surface of the pipe in the form of dark spots.
Possible cause: The temperature of flue gases is lower than the water dew point in the chimney.
Troubleshooting: It is necessary to raise the temperature of the flue gases at the outlet of the chimney by 15 ^{o}C above the dew point, for which do as follows:
a) select a heat-insulated chimney stack (modular sandwich pipes) along its full length, or at least insulate the sections of the chimney at the attic and over the roof with a heat insulating material of the required thickness;
b) use dry fuel type for stoking.

11. MAINTENANCE

IMPORTANT! We kindly ask you to familiarize yourself with this Operation Manual and “Fire Safety Arrangements in the Russian Federation” when performing maintenance works.

Routine maintenance of the chimney, heater and its parts is the key to their efficient and safe operation, your safety and safety of your close ones!

Note: *For information on the water tank maintenance, refer to the Operation Manual for the water tank.*

IMPORTANT! Carry out maintenance works on the heater and chimney only after their complete cooldown.

The heater and chimney shall be cleaned of soot before the commencement of the heating season, as well as during the entire heating season at least once every three months.

Cleaning of the heater and chimney to be performed mechanically using special devices, tools and machines (brush, cleaner, scraper, sinker, vacuum cleaner, etc.). The selection of the necessary devices is performed based on the cleaning work needs.

IMPORTANT! The use of cleaning logs (briquettes), homemade compounds creating high temperature in the heater firebox and chimney, is prohibited for the purposes of burning the soot deposited in them.

If there is a thermal glass door, use soft cleaning waste with special agents for cleaning heat-resistant glass of fireplaces and heaters from soot in accordance with the application instructions.

IMPORTANT! Take measures recommended for safety when cleaning the heater and chimney, use personal protective equipment required for such works.

12. LABELING AND PACKAGING

Labeling
There is an information plate on the heater. It contains the trademark designation, model, month and year of manufacture of the heater, its serial number.

Packaging
The heaters are delivered ready-assembled on pallets, 2 pieces on one pallet, each pre-packaged in film and in a container.

13. TRANSPORTATION AND STORAGE

IMPORTANT! Prior to the first stoking of the heater do not give mechanical impact to the heater surface prior to complete heat-bodying of the paint and its cooldown in order to avoid damage of the coat of heat-resistant paint.

The following storage conditions apply to the storage premises of both the Supplier and the Consumer.

Storage conditions: In accordance with GOST 15150-69, group 3. (in a dry room, providing protection from atmospheric precipitation and direct sunlight), in the original packaging, in a vertical position.

Temperature conditions: from - 60 to + 40 ^{o}C with relative air humidity not more than 80% (at +25 ^{o}C).

IMPORTANT: The air of the storage room shall not contain impurities of corrosive substances.

Shelf life in original packaging until re-preservation is 12 months.

14. DISPOSAL

The Product does not contain any harmful, hazardous, toxic substances, and thus does not pose hazard to human life and health, and to the environment, so it can be disposed of according to the rules for general industrial waste disposal.

15. SCOPE OF SUPPLY

Parts		
Heater firebox	Ready-assembled	1 piece
Door		1 piece
Protective shield		1 piece
Ash drawer		1 piece
Decorative screen		1 piece
Self-tapping screw for the screen		6 pieces
Operation Manual		1 piece
Grate plates		6 pieces

QCD mark: _____

(Name, signature, stamp)

Date of sale: _____

(Date, Seller's signature, store stamp)

I have read and understood this Operation Manual: _____

(Buyer's signature)

IMPORTANT! The Manufacturer disclaims warranty liability in the absence of a store stamp.

Soul Steel Grill'D®